PT OF NW1/4 OF NE1/4 OF
IN OR 2172/1781
SEC 33-2N-25E

TREFRY MICHAEL JAMES
541859 LEM TURNER RD
CALLAHAN, FL 32011

2025

33-2N-25-0000-0007-0030

NASSAU COUNTY PROPERTY

BUILDING CHARACTERISTICS

ELEMENT	CD	CONSTRUCTION
Exterior Wall	20	FACE BRICK 100
Roof Structur	03	GABLE/HIP 100
Roof Cover	03	COMP SHNGL 100
Interior Wall	05	DRYWALL 100
Interior Floo	12	HARDWOOD 70
Interior Floo	11	CLAY TILE 30
Air Condition	03	CENTRAL 100
Heating Type	04	AIR DUCTED 100
Bedrooms		3 100
Bathrooms		2 100
Frame	02	WOOD FRAME 100
Stories	1.	1. 100
Units		0 100
BUD8 Adjustme	06	DIST 1D 100
Occupancy	00	NONE 100
Quality	05	Quality Level 05
DOR CODE	0100	SINGLE FAMILY
MAP NUM		MKT AREA 08
NEIGHBORHOOD/LOC	8001.00	

AREA TYPE	TOTAL GROSS AREA	PCT OF BASE	YEAR	TOT ADJ AREA	SUBAREA MARKET VALUE
BAS	525	100	1993	525	45,207
BAS	2,284	100	1993	2,284	196,674
FOP	72	30	1993	22	1,894
STP	16	10	2011	2	172
STP	18	10	2011	2	172
STP	36	10	2011	4	345
TOTALS	2,951			2,839	244,465

MARKET ADJUSTMENTS

TYPE	MDL	EFF. AREA	TOT ADJ PTS	EFF. BASE RATE	REPL. COST NEW	AYB	EYB	ECON	FNCT		NORM	% COND
0100	01	2,839	118.6944	118.69	336,961	1973	1985	0	0	0	27.45	72.55

1 SINGLE FAM – 100% - 2019 Heated Area: 2809 HX Base Yr 2019

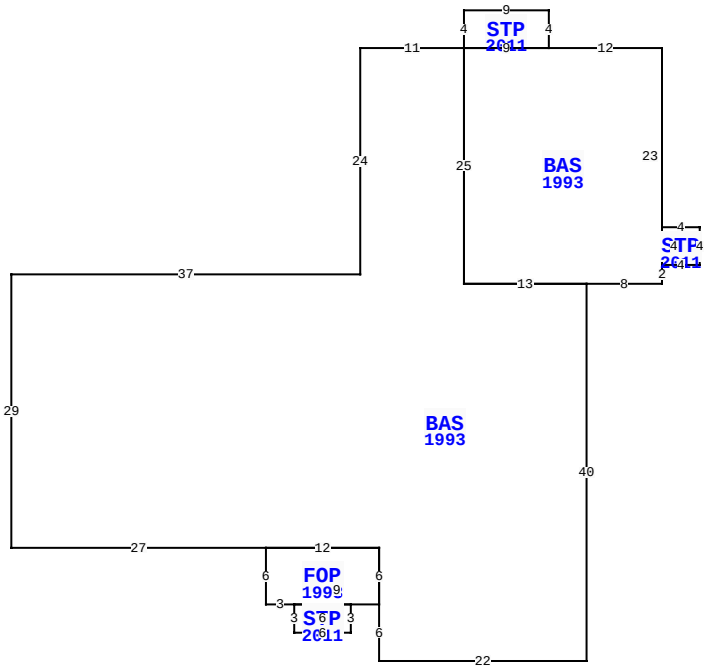

541859 LEM TURNER RD, CALLAHAN

BLD DATE		LGL DATE	
XF DATE		LAND DATE	05/09/2025 MLU
INC DATE		AG DATE	

VALUATION SUMMARY

VALUATION BY		STANDARD
Tax Group: 6	Tax Dist:	
BUILDING MARKET VALUE		244,465
TOTAL MARKET OB/XF VALUE		4,830
TOTAL LAND VALUE - MARKET		70,000
TOTAL MARKET VALUE		319,295
SOH/AGL Deduction		125,155
ASSESSED VALUE		194,140
TOTAL EXEMPTION VALUE	HX HB	50,722
BASE TAXABLE VALUE		143,418
TOTAL JUST VALUE		319,295
NCON VALUE		0
INCOME VALUE		
PREVIOUS YEAR MKT VALUE		309,074

PERMIT NUM	DESCRIPTION	AMT	ISSUED
R960562	REPAIR/RRF	4,300	02/01/1997

SALES DATA

OFF RECORD Number	DATE	TYPE INST	Q / U	V / I	RSN CD	SALE PRICE
2172/1781	12/28/2017	WD	U	I	11	100
GRANTOR: HUTCHINSON JAMES H						
GRANTEE: HUTCHINSON JAMES H						
0124/0588	1/01/1972	TA	Q	V		2,200
GRANTOR:						
GRANTEE:						

BUILDING NOTES

BUILDING DIMENSIONS

BAS=[YR=1993;ORIG=-21,0] W11 S24 W37 S29 E27 E12 S6 S6 E22 N40 W13 N25 $
BAS=[YR=1993;ORIG=0,0] W12 W9 S25 E13 E8 N2 N23 $
FOP=[YR=1993;ORIG=-42,53] S6 E3 E9 N6 W12 $
STP=[YR=2011;ORIG=-12,0] N4 W9 S4 E9 $
STP=[YR=2011;ORIG=-39,59] S3 E6 N3 W6 $
STP=[YR=2011;ORIG=0,23] E4 N4 W4 S4 $
.

EXTRA FEATURES

LN	OB/XF CODE	DESCRIPTION	BLD	CAP	L	W	UNITS	UT	Adj R	ADJ UNIT PRICE	ORIG COND	YEAR ON	YEAR ACTUAL	Q	% COND	OB/XF MKT VALUE	NOTES
1	0500	FP-PRE FAB	0	100	0	0	1.00	UT	3,500.00	3,500.00	100	1973	1973	3	31.6	1,106	
2	0845	KOOL DECK	0	100	0	0	1,001.00	SF	7.25	7.25	100	1980	1980	3	30	2,177	
3	0810	CONCRETE A	0	100	0	0	219.00	SF	6.50	6.50	100	1980	1980	3	30	427	
4	0351	CARPORT MT	0	100	20	28	560.00	SF	10.00	10.00	100	2000	2000	3	20	1,120	

LAND DESCRIPTION

TOTAL OB/XF 4,830

LN	USE CODE	CLS	LAND USE DESCRIPTION	CAP	RD	LOC ZONE	FRONT	DEPTH	TOT LND UTS	UNIT TYPE	DT	DPTH FACT	% COND	TOT ADJ	UNIT PRICE	ADJ UNIT PRICE	LAND VALUE	OTHER ADJUSTMENTS AND NOTES	YEAR	DENSITY	DECL	FRZ	YR	CONSRV
1	000100	C	RES	100	0004	OR	0.00	0.00	2.00	AC		1.00	1.00	1.00	35,000.00	35,000.00	70,000							

REVIEW DATE 01/06/2023 BY KWA Total Acres: 2.00 Total Land Value: 70,000 Market: 0 Agricultural: 0 Common: 70,000 PRINTED 07/30/2025 BY SYS