LOT 37
AMELIA BAY ESTATES PB 7/4
ESMT PT OR 1397/1057

ALLAN LESLEY & KEVIN A
807 ADAMS RD
FERNANDINA BEACH, FL 32034

2025

32-2N-28-005A-0037-0000

NASSAU COUNTY PROPERTY

BUILDING CHARACTERISTICS

ELEMENT	CD	CONSTRUCTION
Exterior Wall	10	ABOVE AVG 100
Roof Structur	08	IRREGULAR 100
Roof Cover	03	COMP SHNGL 100
Interior Wall	05	DRYWALL 100
Interior Floo	13	LVT/LAMNT 70
Interior Floo	11	CLAY TILE 30
Air Condition	03	CENTRAL 100
Heating Type	04	AIR DUCTED 100
Bedrooms		4 100
Bathrooms		4.5 100
Frame	02	WOOD FRAME 100
Stories	2.	2. 100
Units		0 100
Quality	03	Quality Level 03

DOR CODE	0100	SINGLE FAMILY	
MAP NUM		MKT AREA	04
NEIGHBORHOOD/LOC	4008.00		

AREA TYPE	TOTAL GROSS AREA	PCT OF BASE	YEAR	TOT ADJ AREA	SUBAREA MARKET VALUE
BAS	2,715	100	2022	2,715	577,133
FGR	806	55	2022	443	94,170
FOP	207	30	2022	62	13,180
FOP	210	30	2022	63	13,392
FST	15	55	2022	8	1,700
FUS	354	100	2022	354	75,251
PTO	90	5	2022	4	851
STR	50	10	2022	5	1,063
TOTALS	4,447			3,654	776,738

MARKET ADJUSTMENTS

TYPE	MDL	EFF. AREA	TOT ADJ PTS	EFF. BASE RATE	REPL. COST NEW	AYB	EYB	ECON	FNCT		NORM	% COND
0500	11	3,654	135.2169	213.64	780,641	2022	2022	0	0	0	0.50	99.50

1 SFR CUST – 0% - 2025 Heated Area: 3069 HX Base Yr

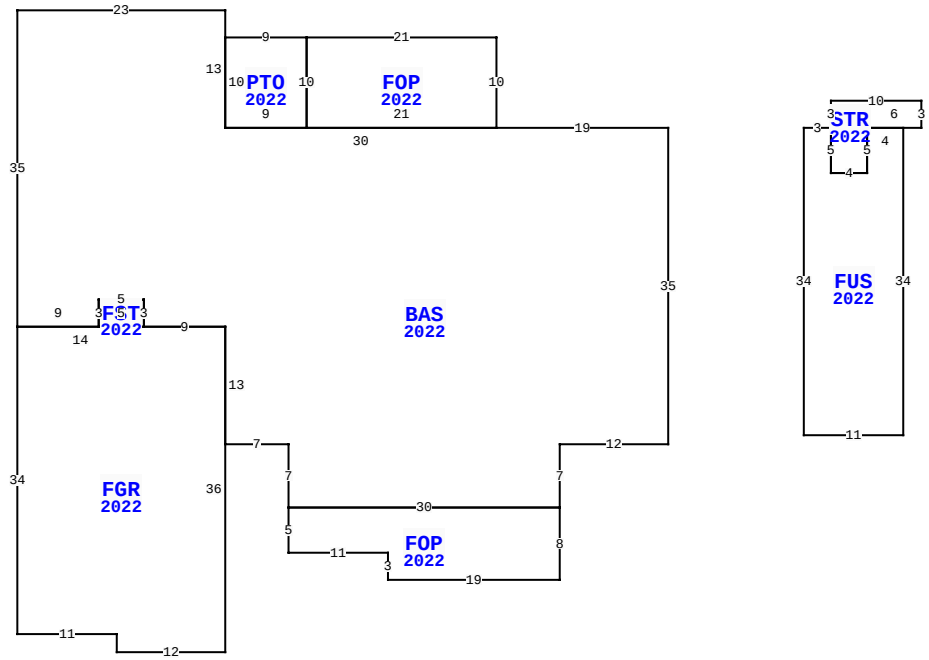

95054 AMBERWOOD LN, FERNANDINA BEACH

BLD DATE		LGL DATE	
XF DATE		LAND DATE	05/09/2025 MLU
INC DATE		AG DATE	

VALUATION SUMMARY

VALUATION BY	STANDARD
Tax Group: 4	Tax Dist:
BUILDING MARKET VALUE	776,738
TOTAL MARKET OB/XF VALUE	8,191
TOTAL LAND VALUE - MARKET	95,000
TOTAL MARKET VALUE	879,929
SOH/AGL Deduction	0
ASSESSED VALUE	879,929
TOTAL EXEMPTION VALUE	0
BASE TAXABLE VALUE	879,929
TOTAL JUST VALUE	879,929
NCON VALUE	0
INCOME VALUE	
PREVIOUS YEAR MKT VALUE	868,574

PERMIT NUM	DESCRIPTION	AMT	ISSUED
22015734	CO ISSUED	0	10/20/2022
21015146	NEW CONSTR	509,293	11/02/2021

SALES DATA

OFF RECORD Number	DATE	TYPE INST	Q U	V I	RSN CD	SALE PRICE
2747/966	10/31/2024	WD	Q	I	01	1,095,100
GRANTOR: RETHELFORD DAVID & KA						
GRANTEE: ALLAN LESLEY & KEVI						
2437/0086	2/24/2021	WD	Q	V	01	79,000
GRANTOR: MARCUM WILLIAM L & MA						
GRANTEE: RETHELFORD DAVID &						

BUILDING NOTES

BUILDING DIMENSIONS

BAS=[YR=2022] W19 FOP=[YR=2022] N10 W21 PTO=[YR=2022] W9 S10 E9 N10$ S10 E21 $ W30 N13 W23 S35 FGR=[YR=2022] S34 E11 S2 E12 N36 W9 FST=[YR=2022] N3W5 S3E5$ W14$ E9 N3 E5 S3 E9 S13 E7 S7 FOP=[YR=2022] S5 E11 S3 E19 N8 W30$ E30 N7 E12 N35$ PTR=E15 FUS=[YR=2022] E3 STR=[YR=2022] N3E10S3W6S5 W4N5$ S5E4N5E4S34 W11 N34$ W15 $.

EXTRA FEATURES

LN	OB/XF CODE	DESCRIPTION	BLD	CAP	L	W	UNITS	UT	Adj R	ADJ UNIT PRICE	ORIG COND	YEAR ON	YEAR ACTUAL	Q	% COND	OB/XF MKT VALUE	NOTES
1	0504	FP-ELECTRI	0	0	0	0	1.00	UT	2,000.00	2,000.00	100	2022	2022	3	99	1,980	
2	0855	CONC PAVER	0	0	0	0	327.00	SF	10.00	10.00	100	2022	2022	3	99	3,237	
3	0855	CONC PAVER	0	0	0	0	144.00	SF	10.00	10.00	100	2022	2022	3	99	1,426	
4	0476	VF 6 SBPL	0	0	0	0	40.00	LF	32.00	32.00	100	2022	2022	3	98	1,254	
5	0470	VNYL GATE	0	0	0	0	1.00	UT	300.00	300.00	100	2022	2022	3	98	294	

LAND DESCRIPTION

TOTAL OB/XF 8,191

LN	USE CODE	CLS	LAND USE DESCRIPTION	CAP	RD	LOC ZONE	FRONT	DEPTH	TOT LND UTS	UNIT TYPE	DT	DPTH FACT	% COND	TOT ADJ	UNIT PRICE	ADJ UNIT PRICE	LAND VALUE	OTHER ADJUSTMENTS AND NOTES	YEAR	DENSITY	DECL	FRZ	YR	CONSRV
1	000100	C	RES	0		OR	0.00	0.00	1.00	LT		1.00	1.00	1.00	95,000.00	95,000.00	95,000							

REVIEW DATE 01/11/2023 BY DJ Total Acres: 0.00 Total Land Value: 95,000 Market: 0 Agricultural: 0 Common: 95,000 PRINTED 07/30/2025 BY SYS