IN OR 2407/60
PARCELS 12-8 & 12-14

JOHNSON MELANIE MARIE
95079 ORIOLE ST
FERNANDINA BEACH, FL 32034

2025

32-2N-28-0000-0012-0080

BUILDING CHARACTERISTICS

ELEMENT	CD	CONSTRUCTION
Exterior Wall	10	ABOVE AVG 100
Roof Structur	03	GABLE/HIP 100
Roof Cover	03	COMP SHNGL 100
Interior Wall	05	DRYWALL 100
Interior Floo	11	CLAY TILE 50
Interior Floo	14	CARPET 50
Air Condition	03	CENTRAL 100
Heating Type	04	AIR DUCTED 100
Bedrooms		3 100
Bathrooms		2 100
Frame	02	WOOD FRAME 100
Stories	1.	1. 100
Units		0 100
Occupancy	00	NONE 100
Quality	03	Quality Level 03
DOR CODE	0100	SINGLE FAMILY
MAP NUM		MKT AREA 04
NEIGHBORHOOD/LOC	4005.00	

AREA TYPE	TOTAL GROSS AREA	PCT OF BASE	YEAR	TOT ADJ AREA	SUBAREA MARKET VALUE
BAS	1,826	100	2013	1,826	256,944
FGR	476	55	2013	262	36,867
FOP	84	30	2013	25	3,518
FSP	264	40	2015	106	14,916
PTO	96	5	2019	5	704
TOTALS	2,746			2,224	312,948

MARKET ADJUSTMENTS

TYPE	MDL	EFF. AREA	TOT ADJ PTS	EFF. BASE RATE	REPL. COST NEW	AYB	EYB	ECON	FNCT		NORM	% COND
0900	01	2,224	112.2100	148.12	329,419	2013	2013	0	0	0	5.00	95.00

1 SNGL FAM – 100% - 2022 Heated Area: 1826 HX Base Yr 2022

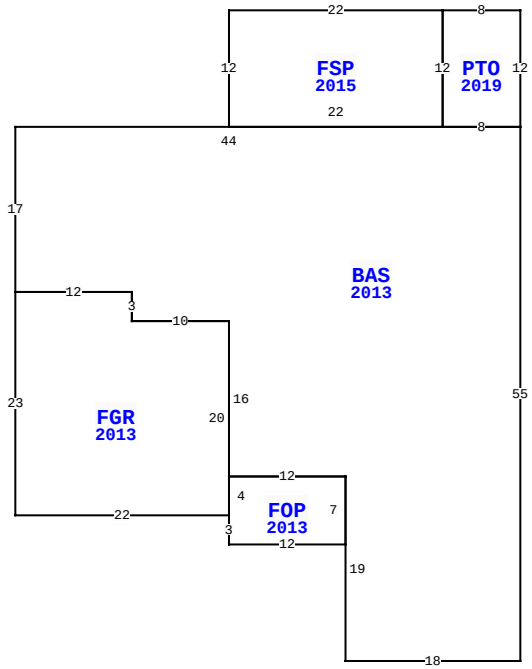

95079 ORIOLE ST, FERNANDINA BEACH

BLD DATE		LGL DATE	
XF DATE		LAND DATE	05/09/2025 MLU
INC DATE		AG DATE	

NASSAU COUNTY PROPERTY

PAGE 1 of 2 4

VALUATION SUMMARY

VALUATION BY		STANDARD
Tax Group: 4	Tax Dist:	
BUILDING MARKET VALUE		365,148
TOTAL MARKET OB/XF VALUE		9,664
TOTAL LAND VALUE - MARKET		57,000
TOTAL MARKET VALUE		431,812
SOH/AGL Deduction		103,617
ASSESSED VALUE		328,195
TOTAL EXEMPTION VALUE	HX HB	50,722
BASE TAXABLE VALUE		277,473
TOTAL JUST VALUE		431,812
NCON VALUE		0
INCOME VALUE		
PREVIOUS YEAR MKT VALUE		399,959

PERMIT NUM	DESCRIPTION	AMT	ISSUED
B1428489	GARAGE	51,953	03/01/2014
C1124463	CO ISSUED	0	07/10/2013
M1217647	H/AC	0	10/01/2012
E23394	NEW CONSTR	0	04/01/2011
P14728	NEW CONSTR	0	04/01/2011
B24463	NEW CONSTR	261,525	03/01/2011

SALES DATA

OFF RECORD Number	DATE	TYPE INST	Q / U	V / I	RSN CD	SALE PRICE
2407/0060	11/06/2020	WD	Q	I	01	340,000
GRANTOR: ANDREE JONATHAN G						
GRANTEE: JOHNSON MELANIE MAR						
2290/0600	7/15/2019	WD	U	I	30	237,000
GRANTOR: ANDREE WADE & SAUNDRA						
GRANTEE: ANDREE JONATHAN G						

BUILDING NOTES

BUILDING DIMENSIONS

PTO=[YR=2019] N12 W8 S12 E8$ BAS=[YR=2013] W8 FSP=[YR=2015] N12 W22 S12 E22 $ W44 S17 FGR=[YR=2013] S23 E22 FOP=[YR=2013] S3 E12 N7 W12 S4 $ N20 W10 N3 W12$ E12 S3 E10 S16 E12 S19 E18 N55 $.

EXTRA FEATURES

LN	OB/XF CODE	DESCRIPTION	BLD	CAP	L	W	UNITS	UT	Adj R	ADJ UNIT PRICE	ORIG COND	YEAR ON	YEAR ACTUAL	Q	% COND	OB/XF MKT VALUE	NOTES
1	0811	CONCRETE B	0	100	0	0	845.00	SF	5.20	5.20	100	2013	2013	3	93	4,086	
2	0811	CONCRETE B	0	100	0	0	725.00	SF	5.20	5.20	100	2015	2015	3	95	3,582	
3	0350	CARPORT WD	0	100	24	12	288.00	SF	8.45	8.45	100	2019	2019	3	82	1,996	

LAND DESCRIPTION

TOTAL OB/XF 9,664

LN	USE CODE	CLS	LAND USE DESCRIPTION	CAP	RD	LOC ZONE	FRONT	DEPTH	TOT LND UTS	UNIT TYPE	DT	DPTH FACT	% COND	TOT ADJ	UNIT PRICE	ADJ UNIT PRICE	LAND VALUE	OTHER ADJUSTMENTS AND NOTES	YEAR	DENSITY	DECL	FRZ	YR	CONSRV
1	000100	C	RES	100		OR	0.00	0.00	0.38	AC		1.00	1.00	1.50	100,000.00	150,000.00	57,000							

REVIEW DATE 07/31/2020 BY KWA Total Acres: 0.38 Total Land Value: 57,000 Market: 0 Agricultural: 0 Common: 57,000 PRINTED 07/30/2025 BY SYS

IN OR 2407/60
PARCELS 12-8 & 12-14

JOHNSON MELANIE MARIE
95079 ORIOLE ST
FERNANDINA BEACH, FL 32034

2025

32-2N-28-0000-0012-0080

BUILDING CHARACTERISTICS

ELEMENT	CD	CONSTRUCTION
Exterior Wall	10	ABOVE AVG 100
Roof Structur	03	GABLE/HIP 100
Roof Cover	03	COMP SHNGL 100
Interior Wall	05	DRYWALL 100
Interior Floo	08	SHT VINYL 100
Air Condition	03	CENTRAL 100
Heating Type	04	AIR DUCTED 100
Bedrooms		1 100
Bathrooms		1 100
Frame	02	WOOD FRAME 100
Stories	1.5	1.5 100
Units		0 100
Occupancy	00	NONE 100
Quality	02	Quality Level 02

DOR CODE	0100	SINGLE FAMILY	
MAP NUM		MKT AREA	04
NEIGHBORHOOD/LOC	4005.00		

AREA TYPE	TOTAL GROSS AREA	PCT OF BASE	YEAR	TOT ADJ AREA	SUBAREA MARKET VALUE
APT	366	100	2015	366	22,164
FGR	896	55	2015	493	29,854
STR	30	10	2019	3	181
TOTALS	1,292			862	52,200

MARKET ADJUSTMENTS

TYPE	MDL	EFF. AREA	TOT ADJ PTS	EFF. BASE RATE	REPL. COST NEW	AYB	EYB	ECON	FNCT		NORM	% COND
0150	01	862	119.0160	63.08	54,375	2015	2015	0	0	0	4.00	96.00

2 ACCESORY U – 100% - 2022 Heated Area: 366 HX Base Yr 2022

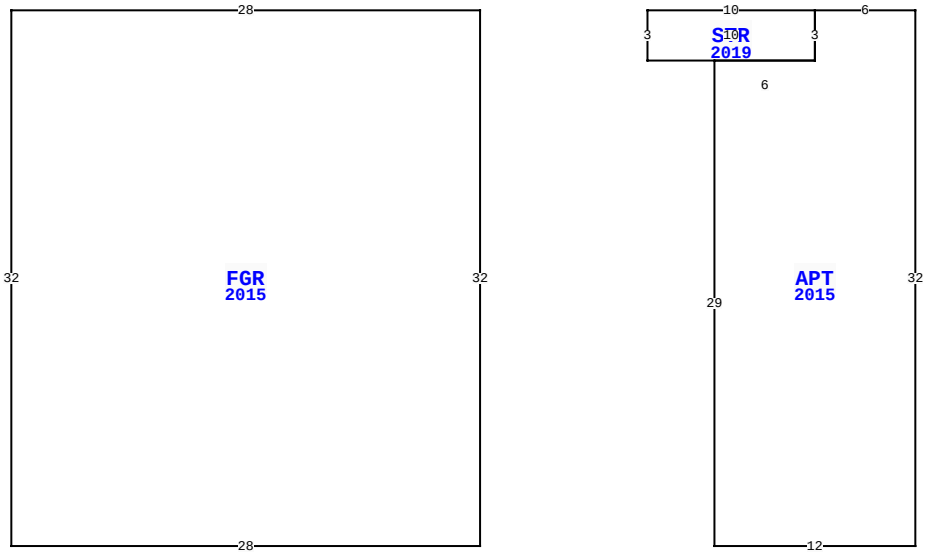

95079 ORIOLE ST, FERNANDINA BEACH

BLD DATE		LGL DATE	
XF DATE		LAND DATE	05/09/2025 MLU
INC DATE		AG DATE	

NASSAU COUNTY PROPERTY

PAGE 2 of 2 4

VALUATION SUMMARY

VALUATION BY		STANDARD
Tax Group: 4	Tax Dist:	
BUILDING MARKET VALUE		365,148
TOTAL MARKET OB/XF VALUE		9,664
TOTAL LAND VALUE - MARKET		57,000
TOTAL MARKET VALUE		431,812
SOH/AGL Deduction		103,617
ASSESSED VALUE		328,195
TOTAL EXEMPTION VALUE	HX HB	50,722
BASE TAXABLE VALUE		277,473
TOTAL JUST VALUE		431,812
NCON VALUE		0
INCOME VALUE		
PREVIOUS YEAR MKT VALUE		399,959

PERMIT NUM	DESCRIPTION	AMT	ISSUED

SALES DATA

OFF RECORD Number	DATE	TYPE INST	Q / U	V / I	RSN CD	SALE PRICE
2407/0060	11/06/2020	WD	Q	I	01	340,000
GRANTOR: ANDREE JONATHAN G						
GRANTEE: JOHNSON MELANIE MAR						
2290/0600	7/15/2019	WD	U	I	30	237,000
GRANTOR: ANDREE WADE & SAUNDRA						
GRANTEE: ANDREE JONATHAN G						

BUILDING NOTES

BUILDING DIMENSIONS

FGR=[YR=2015] W28 S32 E28 N32$ PTR= E10 STR=[YR=2019] E10
APT=[YR=2015] E6 S32 W12 N29E6 N3$ S3 W10 N3$ W10$.

EXTRA FEATURES

L N	OB/XF CODE	DESCRIPTION	BLD	CAP	L	W	UNITS	UT	Adj R	ADJ UNIT PRICE	ORIG COND	YEAR ON	YEAR ACTUAL	Q	% COND	OB/XF MKT VALUE	NOTES

LAND DESCRIPTION

TOTAL OB/XF 0

L N	USE CODE	CLS	LAND USE DESCRIPTION	CAP	R D	LOC ZONE	FRONT	DEPTH	TOT LND UTS	UNIT TYPE	D T	DPTH FACT	% COND	TOT ADJ	UNIT PRICE	ADJ UNIT PRICE	LAND VALUE	OTHER ADJUSTMENTS AND NOTES	YEAR	DENSITY	DECL	FRZ	YR	CONSRV

REVIEW DATE 07/31/2020 BY KWA Total Acres: 0.38 Total Land Value: 57,000 Market: 0 Agricultural: 0 Common: 57,000 PRINTED 07/30/2025 BY SYS