PT OF LOTS 4 & 5
IN OR 2265/1165
PICKETT ESTATE PBK 2/27

FORTENBERRY HALEY B/KIMES AUSTIN DEAN
44100 CATTLEBEND LN
CALLAHAN, FL 32011

2025

32-2N-25-4020-0004-0000

NASSAU COUNTY PROPERTY

BUILDING CHARACTERISTICS

ELEMENT	CD	CONSTRUCTION
Exterior Wall	10	ABOVE AVG 100
Roof Structur	03	GABLE/HIP 100
Roof Cover	03	COMP SHNGL 100
Interior Wall	05	DRYWALL 100
Interior Floo	12	HARDWOOD 50
Interior Floo	14	CARPET 50
Air Condition	03	CENTRAL 100
Heating Type	04	AIR DUCTED 100
Bedrooms		4 100
Bathrooms		2.5 100
Frame	02	WOOD FRAME 100
Stories	2.	2. 100
Units		0 100
Occupancy	00	NONE 100
Quality	03	Quality Level 03
DOR CODE	0100	SINGLE FAMILY
MAP NUM		MKT AREA 08
NEIGHBORHOOD/LOC	8001.00	

AREA TYPE	TOTAL GROSS AREA	PCT OF BASE	YEAR	TOT ADJ AREA	SUBAREA MARKET VALUE
BAS	1,846	100	2019	1,846	253,325
FOP	195	30	2019	58	7,960
FOP	472	30	2019	142	19,486
FUS	464	100	2019	464	63,675
STP	12	10	2019	1	137
STP	16	10	2019	2	274
STR	24	10	2019	2	274
TOTALS	3,029			2,515	345,132

MARKET ADJUSTMENTS

TYPE	MDL	EFF. AREA	TOT ADJ PTS	EFF. BASE RATE	REPL. COST NEW	AYB	EYB	ECON	FNCT		NORM	% COND
0900	01	2,515	106.0800	140.03	352,175	2019	2019	0	0	0	2.00	98.00

1 SNGL FAM – 100% - 2020 Heated Area: 2310 HX Base Yr 2020

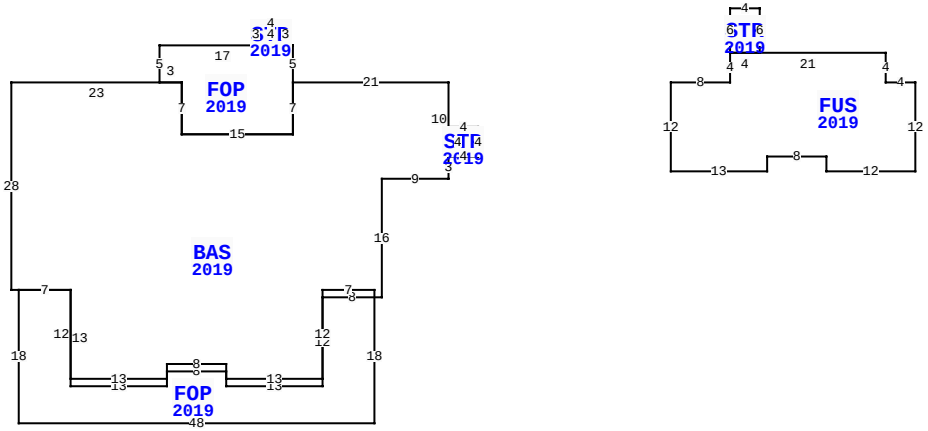

44100 CATTLE BEND DR, CALLAHAN

BLD DATE		LGL DATE	
XF DATE		LAND DATE	05/09/2025 MLU
INC DATE		AG DATE	

NASSAU COUNTY PROPERTY — VALUATION SUMMARY

VALUATION BY		STANDARD
Tax Group: 6	Tax Dist:	
BUILDING MARKET VALUE		345,132
TOTAL MARKET OB/XF VALUE		19,246
TOTAL LAND VALUE - MARKET		163,020
TOTAL MARKET VALUE		527,398
SOH/AGL Deduction		192,715
ASSESSED VALUE		334,683
TOTAL EXEMPTION VALUE	HX HB	50,722
BASE TAXABLE VALUE		283,961
TOTAL JUST VALUE		527,398
NCON VALUE		0
INCOME VALUE		
PREVIOUS YEAR MKT VALUE		481,848

PERMIT NUM	DESCRIPTION	AMT	ISSUED
19004076	CO ISSUED	0	10/29/2019

SALES DATA

OFF RECORD Number	DATE	TYPE INST	Q / U	V / I	RSN CD	SALE PRICE
2265/1165	3/28/2019	WD	U	V	11	100
GRANTOR: KIMES AUSTIN DEAN						
GRANTEE: FORTENBERRY HALEY &						
2253/0537	2/05/2019	QC	U	V	11	100
GRANTOR: KIMES DONDI CLINTON						
GRANTEE: KIMES AUSTIN DEAN						

BUILDING NOTES

BUILDING DIMENSIONS

BAS=[YR=2019] W21 FOP=[YR=2019] N5 W1 STP=[YR=2019] N3 W4 S3 E4$ W17 S5 E3 S7 E15 N7$ S7 W15 N7 W23 S28 E1 FOP=[YR=2019] S18 E48 N18 W7 S12 W13 N2 W8 S2 W13 N12 W7$ E7 S13 E13 N2 E8 S2 E13 N12 E8 N16 E9 N3 STP=[YR=2019] E4 N4 W4 S4$ N10$ PTR=E30 FUS=[YR=2019] E8 N4 STR=[YR=2019] N6 E4 S6 W4$ E21 S4 E4 S12 W12 N2 W8 S2 W13 N12$ W30$.

EXTRA FEATURES

LN	OB/XF CODE	DESCRIPTION	BLD	CAP	L	W	UNITS	UT	Adj R	ADJ UNIT PRICE	ORIG COND	YEAR ON	YEAR ACTUAL	Q	% COND	OB/XF MKT VALUE	NOTES
1	0810	CONCRETE A	0	100	0	0	840.00	SF	6.50	6.50	100	2019	2019	3	97	5,296	
2	0680	POLE SHED	0	100	50	30	1,500.00	SF	10.00	10.00	100	2021	2021	3	93	13,950	

LAND DESCRIPTION

TOTAL OB/XF 19,246

LN	USE CODE	CLS	LAND USE DESCRIPTION	CAP	RD	LOC ZONE	FRONT	DEPTH	TOT LND UTS	UNIT TYPE	DT	DPTH FACT	% COND	TOT ADJ	UNIT PRICE	ADJ UNIT PRICE	LAND VALUE	OTHER ADJUSTMENTS AND NOTES	YEAR	DENSITY	DECL	FRZ	YR	CONSRV
1	000100	C	RES	100		OR	0.00	0.00	8.36	AC		1.00	1.00	1.00	19,500.00	19,500.00	163,020							

REVIEW DATE 12/18/2019 BY KB Total Acres: 8.36 Total Land Value: 163,020 Market: 0 Agricultural: 0 Common: 163,020 PRINTED 07/30/2025 BY SYS