PT OR 2439/1330
ESMT OR 545/1212

MCANINCH TERRIE L
541727 US HIGHWAY 1
CALLAHAN, FL 32011

**2025**

**32-2N-25-0000-0003-0010**

## NASSAU COUNTY PROPERTY



### BUILDING CHARACTERISTICS

| ELEMENT | CD | CONSTRUCTION |
|---|---|---|
| Exterior Wall | 20 | FACE BRICK 100 |
| Roof Structur | 03 | GABLE/HIP 100 |
| Roof Cover | 03 | COMP SHNGL 100 |
| Interior Wall | 05 | DRYWALL 100 |
| Interior Floo | 14 | CARPET 90 |
| Interior Floo | 08 | SHT VINYL 10 |
| Air Condition | 03 | CENTRAL 100 |
| Heating Type | 04 | AIR DUCTED 100 |
| Bedrooms | | 3 100 |
| Bathrooms | | 2 100 |
| Frame | 02 | WOOD FRAME 100 |
| Stories | 1. | 1. 100 |
| Units | | 0 100 |
| BUD8 Adjustme | 06 | DIST 1D 100 |
| Occupancy | 00 | NONE 100 |
| Quality | 03 | Quality Level 03 |
| DOR CODE | 0100 | SINGLE FAMILY |
| MAP NUM | | MKT AREA 08 |
| NEIGHBORHOOD/LOC | 8001.00 | |

| AREA TYPE | TOTAL GROSS AREA | PCT OF BASE | YEAR | TOT ADJ AREA | SUBAREA MARKET VALUE |
|---|---|---|---|---|---|
| BAS | 2,542 | 100 | 1993 | 2,542 | 173,441 |
| FOP | 50 | 30 | 1993 | 15 | 1,023 |
| PTO | 266 | 5 | 1993 | 13 | 887 |
| UDU | 30 | 55 | 1993 | 16 | 1,092 |
| UDU | 225 | 55 | 1993 | 124 | 8,460 |
| TOTALS | 3,113 | | | 2,710 | 184,904 |

### MARKET ADJUSTMENTS

| TYPE | MDL | EFF. AREA | TOT ADJ PTS | EFF. BASE RATE | REPL. COST NEW | AYB | EYB | ECON | FNCT | | NORM | % COND |
|---|---|---|---|---|---|---|---|---|---|---|---|---|
| 0100 | 01 | 2,710 | 101.7600 | 101.76 | 275,770 | 1962 | 1975 | 0 | 0 | 0 | 32.95 | 67.05 |

1 SINGLE FAM – 0% - 2022 Heated Area: 2542 HX Base Yr

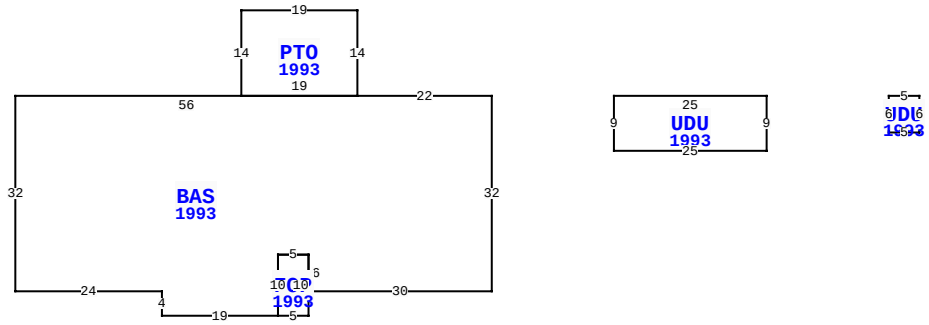


44076 WOODSIDE LN, CALLAHAN

| | | | |
|---|---|---|---|
| BLD DATE | | LGL DATE | |
| XF DATE | | LAND DATE | 05/21/2025 MLU |
| INC DATE | | AG DATE | |

### NASSAU COUNTY PROPERTY — VALUATION SUMMARY

| | |
|---|---|
| VALUATION BY | STANDARD |
| Tax Group: 6 | Tax Dist: |
| BUILDING MARKET VALUE | 184,904 |
| TOTAL MARKET OB/XF VALUE | 14,964 |
| TOTAL LAND VALUE - MARKET | 45,000 |
| TOTAL MARKET VALUE | 244,868 |
| SOH/AGL Deduction | 0 |
| ASSESSED VALUE | 244,868 |
| TOTAL EXEMPTION VALUE | 0 |
| BASE TAXABLE VALUE | 244,868 |
| TOTAL JUST VALUE | 244,868 |
| NCON VALUE | 0 |
| INCOME VALUE | |
| PREVIOUS YEAR MKT VALUE | 227,380 |

| PERMIT NUM | DESCRIPTION | AMT | ISSUED |
|---|---|---|---|
| 8265 | REPAIR/RRF | 1,900 | 07/24/1992 |

### SALES DATA

| OFF RECORD Number | DATE | TYPE INST | Q / U | V / I | RSN CD | SALE PRICE |
|---|---|---|---|---|---|---|
| 2638/1045 | 12/01/2021 | WD | U | I | 11 | 100 |
| GRANTOR: CARTER SARA | | | | | | |
| GRANTEE: MCANINCH TERRIE L | | | | | | |
| 2518/1480 | 12/01/2021 | WD | P | I | 98 | 230,000 |
| GRANTOR: CARTER SARA | | | | | | |
| GRANTEE: MCANINCH TERRIE L | | | | | | |

### BUILDING NOTES

### BUILDING DIMENSIONS

BAS=[YR=1993] W22 PTO=[YR=1993] N14 W19 S14 E19$ W56 S32 E24 S4 E19 FOP=[YR=1993] E5 N10 W5 S10$ N10 E5 S6 E30 N32$ PTR=E20 UDU=[YR=1993] E25 S9 W25 N9$ W20$ PTR= E65 UDU=[YR=1993] E5 S6 W5 N6$ W65$.

### EXTRA FEATURES

| LN | OB/XF CODE | DESCRIPTION | BLD | CAP | L | W | UNITS | UT | Adj R | ADJ UNIT PRICE | ORIG COND | YEAR ON | YEAR ACTUAL | Q | % COND | OB/XF MKT VALUE | NOTES |
|---|---|---|---|---|---|---|---|---|---|---|---|---|---|---|---|---|---|
| 1 | 0812 | CONCRETE C | 0 | 0 | 0 | 0 | 1,530.00 | SF | 4.00 | 4.00 | 100 | 1962 | 1962 | 3 | 20 | 1,224 | |
| 2 | 0511 | GARAGE CB- | 0 | 0 | 32 | 25 | 800.00 | SF | 40.00 | 40.00 | 100 | 1979 | 1979 | 3 | 29 | 9,280 | |
| 3 | 0940 | SHEDS/PORT | 0 | 0 | 0 | 0 | 440.00 | SF | 30.00 | 30.00 | 100 | 1975 | 1975 | 3 | 20 | 2,640 | |
| 4 | 0350 | CARPORT WD | 0 | 0 | 35 | 20 | 700.00 | SF | 13.00 | 13.00 | 100 | 1962 | 1962 | 3 | 20 | 1,820 | |

### LAND DESCRIPTION

TOTAL OB/XF 14,964

| LN | USE CODE | CLS | LAND USE DESCRIPTION | CAP | RD | LOC ZONE | FRONT | DEPTH | TOT LND UTS | UNIT TYPE | DT | DPTH FACT | % COND | TOT ADJ | UNIT PRICE | ADJ UNIT PRICE | LAND VALUE | OTHER ADJUSTMENTS AND NOTES | YEAR | DENSITY | DECL | FRZ | YR | CONSRV |
|---|---|---|---|---|---|---|---|---|---|---|---|---|---|---|---|---|---|---|---|---|---|---|---|---|
| 1 | 000100 | C | RES | 0 | | OR | 0.00 | 0.00 | 1.00 | AC | | 1.00 | 1.00 | 1.00 | 45,000.00 | 45,000.00 | 45,000 | | | | | | | |

REVIEW DATE 01/06/2023 BY KWA Total Acres: 1.00 Total Land Value: 45,000 Market: 0 Agricultural: 0 Common: 45,000 PRINTED 07/30/2025 BY SYS