PT SEC 30-4N-24E
IN OR 2586/468

J&J RE CAPITAL LLC
5121 BOWDEN ROAD #307
JACKSONVILLE, FL 32216

2025

30-4N-24-0000-0004-0000

NASSAU COUNTY PROPERTY

BUILDING CHARACTERISTICS

ELEMENT	CD	CONSTRUCTION
Exterior Wall	18	CEMENT BRK 60
Exterior Wall	05	AVERAGE 40
Roof Structur	04	WOOD TRUSS 100
Roof Cover	03	COMP SHNGL 100
Interior Wall	05	DRYWALL 100
Interior Floo	03	CONC FINSH 80
Interior Floo	11	CLAY TILE 20
Ceiling	03	PART.FIN. 100
Air Condition	03	CENTRAL 100
Heating Type	01	NONE 100
Fixtures		15 100
Frame	03	MASONRY 100
Story Height		20 100
RMS		1 100
Stories	1.5	1.5 100
Units		0 100
BUD8 Adjustme	04	DIST 01 100
Occupancy	00	NONE 100
Quality	03	Quality Level 03
DOR CODE	1100	STORES, 1 STORY
MAP NUM		MKT AREA 09
NEIGHBORHOOD/LOC	9002.00	

AREA TYPE	TOTAL GROSS AREA	PCT OF BASE	YEAR	TOT ADJ AREA	SUBAREA MARKET VALUE
BAS	264	100	1994	264	12,569
BAS	1,070	100	1994	1,070	50,943
CAN	261	30	1993	78	3,714
CAN	280	30	1993	84	3,999
CAN	370	30	1993	111	5,285
CAN	1,050	30	1994	315	14,997
FST	135	50	1993	68	3,238
FST	2,471	50	1993	1,236	58,846
UST	400	40	1993	160	7,618
UST	675	40	1993	270	12,855
TOTALS	6,976			3,656	174,062

MARKET ADJUSTMENTS

TYPE	MDL	EFF. AREA	TOT ADJ PTS	EFF. BASE RATE	REPL. COST NEW	AYB	EYB	ECON	FNCT	AP	NORM	% COND
1101	04	3,656	113.7614	158.70	580,207	1942	1985	0	0	20	50.00	30.00

1 RETAILSTOR – 0% - 2023 Heated Area: 1334 HX Base Yr

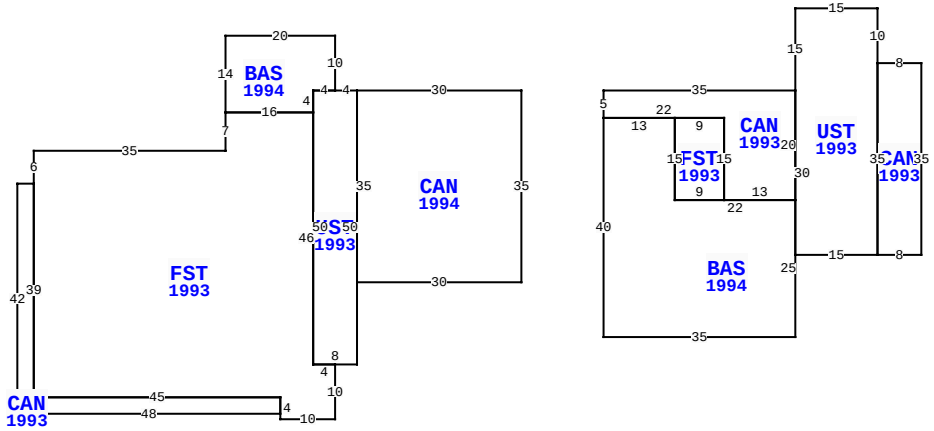

553584 US HWY 1, HILLIARD

BLD DATE	09/24/2020	KK	LGL DATE	
XF DATE	09/24/2020	KK	LAND DATE	04/29/2025 DC
INC DATE			AG DATE	

VALUATION SUMMARY

VALUATION BY	STANDARD
Tax Group: 4	Tax Dist:
BUILDING MARKET VALUE	174,062
TOTAL MARKET OB/XF VALUE	15,772
TOTAL LAND VALUE - MARKET	235,224
TOTAL MARKET VALUE	425,058
SOH/AGL Deduction	38,615
ASSESSED VALUE	386,443
TOTAL EXEMPTION VALUE	0
BASE TAXABLE VALUE	386,443
TOTAL JUST VALUE	425,058
NCON VALUE	0
INCOME VALUE	
PREVIOUS YEAR MKT VALUE	351,312

PERMIT NUM	DESCRIPTION	AMT	ISSUED

SALES DATA

OFF RECORD Number	DATE	TYPE INST	Q U	V I	RSN CD	SALE PRICE
2586/0468	8/04/2022	SW	U	I	12	425,000
GRANTOR: FNB SOUTH						
GRANTEE: J&J RE CAPITAL LLC						
2563/0725	5/16/2022	CT	U	I	18	100
GRANTOR: CLERK OF COURT						
GRANTEE: FNB SOUTH						

BUILDING NOTES

BUILDING DIMENSIONS

CAN=[YR=1994] W30 UST=[YR=1993] W4 BAS=[YR=1994] N10 W20 S14 FST=[YR=1993] S7 W35 S6 CAN=[YR=1993] W3 S42 E48 N3 W45 N39 $ S39 E45 S4 E10 N10 W4 N46 W16 $ E16 N4 E4 $ W4 S50 E8 N50 $ S35 E30 N35 $ PTR= E15 CAN=[YR=1993] E35 UST=[YR=1993] N15 E15 S10 CAN=[YR=1993] E8 S35 W8 N35 $ S35 W15 N30 $ S20 BAS=[YR=1994] S25 W35 N40 E13 FST=[YR=1993] S15 E9 N15 W9 $ S15 E22 $ W13 N15 W22 N5 $ W15 $.

EXTRA FEATURES

LN	OB/XF CODE	DESCRIPTION	BLD	CAP	L	W	UNITS	UT	Adj R	ADJ UNIT PRICE	ORIG COND	YEAR ON	YEAR ACTUAL	Q	% COND	OB/XF MKT VALUE	NOTES
1	0430	CL FNC 6B	0	0	0	0	650.00	LF	9.70	9.70	100	2001	2001	3	52	3,279	
2	0464	FNC GT 10'	0	0	0	0	4.00	UT	350.00	350.00	100	2001	2001	3	52	728	
3	0463	FENCE GATE	0	0	0	0	2.00	UT	300.00	300.00	100	2014	2014	3	85	510	
4	0350	CARPORT WD	0	0	35	21	735.00	SF	13.00	13.00	100	2012	2012	3	50	4,778	
5	0972	ST LGHT UN	0	0	0	0	8.00	UT	1,265.00	1,265.00	100	2005	2005	3	64	6,477	

LAND DESCRIPTION

TOTAL OB/XF 15,772

LN	USE CODE	CLS	LAND USE DESCRIPTION	CAP	RD	LOC ZONE	FRONT	DEPTH	TOT LND UTS	UNIT TYPE	DT	DPTH FACT	% COND	TOT ADJ	UNIT PRICE	ADJ UNIT PRICE	LAND VALUE	OTHER ADJUSTMENTS AND NOTES	YEAR	DENSITY	DECL	FRZ	YR	CONSRV
1	001100	C	STORE 1FLR	0		CG	0.00	0.00	392,040.00	SF		1.00	1.00	0.80	0.75	0.60	235,224							

REVIEW DATE 09/24/2020 BY KK Total Acres: 9.00 Total Land Value: 235,224 Market: 0 Agricultural: 0 Common: 235,224 PRINTED 07/30/2025 BY SYS