PT OF SE1/4
IN OR 2397/433
PARCELS 7-21 & 7-22

JOHNSON NICHOLAS B & MAYKAYLA
26169 WILLIE HODGES RD
HILLIARD, FL 32046

2025

30-3N-24-0000-0007-0210

NASSAU COUNTY PROPERTY

BUILDING CHARACTERISTICS

ELEMENT	CD	CONSTRUCTION
Exterior Wall	20	FACE BRICK 60
Exterior Wall	30	VINYL 40
Roof Structur	08	IRREGULAR 100
Roof Cover	03	COMP SHNGL 100
Interior Wall	05	DRYWALL 80
Interior Wall	06	CUST PANEL 20
Interior Floo	12	HARDWOOD 50
Interior Floo	14	CARPET 50
Air Condition	03	CENTRAL 100
Heating Type	04	AIR DUCTED 100
Bedrooms		5 100
Bathrooms		3.5 100
Frame	02	WOOD FRAME 100
Stories	2.	2. 100
Units		0 100
Occupancy	00	NONE 100
Quality	04	Quality Level 04
DOR CODE	0100	SINGLE FAMILY
MAP NUM		MKT AREA 09
NEIGHBORHOOD/LOC	9001.00	

AREA TYPE	TOTAL GROSS AREA	PCT OF BASE	YEAR	TOT ADJ AREA	SUBAREA MARKET VALUE
BAS	2,212	100	1998	2,212	268,349
BAS	117	100	2008	117	14,194
FOP	273	30	1998	82	9,948
FOP	279	30	1998	84	10,191
FUS	1,224	100	1998	1,224	148,490
UOP	30	20	2008	6	728
TOTALS	4,135			3,725	451,899

MARKET ADJUSTMENTS

TYPE	MDL	EFF. AREA	TOT ADJ PTS	EFF. BASE RATE	REPL. COST NEW	AYB	EYB	ECON	FNCT		NORM	% COND
0900	01	3,725	106.3125	140.33	522,729	1998	2003	0	0	0	13.55	86.45

1 SNGL FAM – 100% - 2021 Heated Area: 3553 HX Base Yr 2021

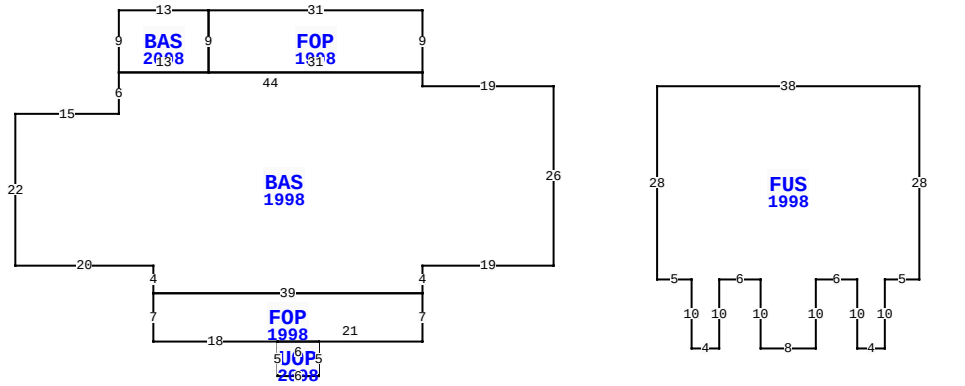

26169 WILLIE HODGES RD, HILLIARD

BLD DATE		LGL DATE	
XF DATE		LAND DATE	05/09/2025 MLU
INC DATE		AG DATE	

NASSAU COUNTY PROPERTY — VALUATION SUMMARY

VALUATION BY		STANDARD
Tax Group: 4	Tax Dist:	
BUILDING MARKET VALUE		541,538
TOTAL MARKET OB/XF VALUE		14,703
TOTAL LAND VALUE - MARKET		111,345
TOTAL MARKET VALUE		667,586
SOH/AGL Deduction		159,992
ASSESSED VALUE		507,594
TOTAL EXEMPTION VALUE	HX HB	50,722
BASE TAXABLE VALUE		456,872
TOTAL JUST VALUE		667,586
NCON VALUE		0
INCOME VALUE		
PREVIOUS YEAR MKT VALUE		639,940

PERMIT NUM	DESCRIPTION	AMT	ISSUED
19004239	REPAIR/RRF	5,500	04/25/2019
R1413928	REPAIR/RRF	26,210	05/01/2014
M13457	MECH OTHER	0	11/01/2007
E0617514	ELEC OTHER	50	06/01/2006
P0611247	OTHER	0	06/01/2006
B17689	NEW CONSTR	82,764	05/01/2006

SALES DATA

OFF RECORD Number	DATE	TYPE INST	Q / U	V / I	RSN CD	SALE PRICE
2397/0433	9/28/2020	WD	Q	I	01	520,000
GRANTOR: DAVIS DONNIE C & LOUI						
GRANTEE: JOHNSON NICHOLAS B						
0896/0219	8/20/1999	QC	U	I	07	100
GRANTOR: DAVIS DONNIE ETAL						
GRANTEE: DAVIS DONNIE & LOUI						

BUILDING NOTES

BUILDING DIMENSIONS

BAS=[YR=1998] W19 N2 FOP=[YR=1998] N9 W31 BAS=[YR=2008] W13 S9 E13 N9$ S9 E31$ W44 S6 W15 S22 E20 S4 FOP=[YR=1998] S7 E18 UOP=[YR=2008] S5 E6 N5 W6$ E21 N7 W39$ E39 N4 E19 N26$ PTR=E15 FUS=[YR=1998] E38 S28 W5 S10 W4 N10 W6 S10 W8 N10 W6 S10 W4 N10 W5 N28$ W15$.

EXTRA FEATURES

LN	OB/XF CODE	DESCRIPTION	BLD	CAP	L	W	UNITS	UT	Adj R	ADJ UNIT PRICE	ORIG COND	YEAR ON	YEAR ACTUAL	Q	% COND	OB/XF MKT VALUE	NOTES
1	0500	FP-PRE FAB	0	100	0	0	1.00	UT	3,500.00	3,500.00	100	1998	1998	3	80	2,800	
2	0861	POOL GUNIT	0	100	0	0	415.00	SF	85.00	85.00	100	1998	1998	3	20	7,055	
3	0845	KOOL DECK	0	100	0	0	600.00	SF	7.25	7.25	100	1998	1998	3	73	3,176	
4	0681	POLE SHED	0	100	12	12	144.00	SF	15.00	15.00	100	2003	2003	3	30	648	
5	0681	POLE SHED	0	100	21	13	273.00	SF	15.00	15.00	100	1998	1998	3	25	1,024	

LAND DESCRIPTION

TOTAL OB/XF 14,703

LN	USE CODE	CLS	LAND USE DESCRIPTION	CAP	RD	LOC ZONE	FRONT	DEPTH	TOT LND UTS	UNIT TYPE	DT	DPTH FACT	% COND	TOT ADJ	UNIT PRICE	ADJ UNIT PRICE	LAND VALUE	OTHER ADJUSTMENTS AND NOTES	YEAR	DENSITY	DECL	FRZ	YR	CONSRV
1	000100	C	RES	100	0005	OR	0.00	0.00	5.71	AC		1.00	1.00	1.00	19,500.00	19,500.00	111,345							

REVIEW DATE 09/23/2019 BY TWX Total Acres: 5.71 Total Land Value: 111,345 Market: 0 Agricultural: 0 Common: 111,345 PRINTED 07/30/2025 BY SYS

PT OF SE1/4
IN OR 2397/433
PARCELS 7-21 & 7-22

JOHNSON NICHOLAS B & MAYKAYLA
26169 WILLIE HODGES RD
HILLIARD, FL 32046

2025

30-3N-24-0000-0007-0210

BUILDING CHARACTERISTICS

ELEMENT	CD	CONSTRUCTION
Exterior Wall	05	AVERAGE 90
Exterior Wall	20	FACE BRICK 10
Roof Structur	03	GABLE/HIP 100
Roof Cover	03	COMP SHNGL 100
Interior Wall	05	DRYWALL 100
Interior Floo	03	CONC FINSH 50
Interior Floo	14	CARPET 50
Air Condition	03	CENTRAL 100
Heating Type	04	AIR DUCTED 100
Bedrooms		0 100
Bathrooms		0 100
Frame	02	WOOD FRAME 100
Stories	0	0 100
Units		0 100
Occupancy	00	NONE 100
Quality	06	Quality Level 06
DOR CODE	0100	SINGLE FAMILY
MAP NUM		MKT AREA 09
NEIGHBORHOOD/LOC	9001.00	

AREA TYPE	TOTAL GROSS AREA	PCT OF BASE	YEAR	TOT ADJ AREA	SUBAREA MARKET VALUE
BAS	968	100	2009	968	51,557
FGR	960	55	2008	528	28,122
FOP	588	30	2009	176	9,374
STR	108	10	2009	11	586
TOTALS	2,624			1,683	89,639

MARKET ADJUSTMENTS

TYPE	MDL	EFF. AREA	TOT ADJ PTS	EFF. BASE RATE	REPL. COST NEW	AYB	EYB	ECON	FNCT		NORM	% COND
0150	01	1,683	106.1450	56.26	94,686	2008	2013	0	0	0	5.33	94.67

2 ACCESORY U – 100% - 2021 Heated Area: 968 HX Base Yr 2021

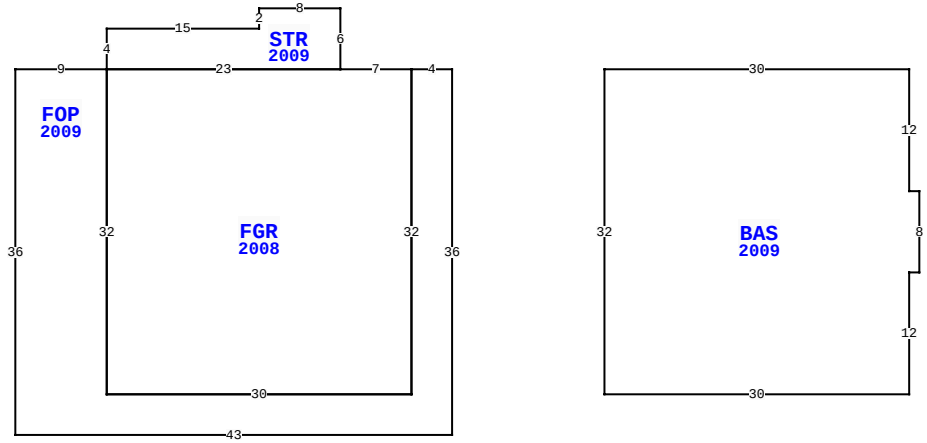

26169 WILLIE HODGES RD, HILLIARD

BLD DATE		LGL DATE	
XF DATE		LAND DATE	05/09/2025 MLU
INC DATE		AG DATE	

NASSAU COUNTY PROPERTY

PAGE 2 of 2 4

VALUATION SUMMARY

VALUATION BY		STANDARD
Tax Group: 4	Tax Dist:	
BUILDING MARKET VALUE		541,538
TOTAL MARKET OB/XF VALUE		14,703
TOTAL LAND VALUE - MARKET		111,345
TOTAL MARKET VALUE		667,586
SOH/AGL Deduction		159,992
ASSESSED VALUE		507,594
TOTAL EXEMPTION VALUE	HX HB	50,722
BASE TAXABLE VALUE		456,872
TOTAL JUST VALUE		667,586
NCON VALUE		0
INCOME VALUE		
PREVIOUS YEAR MKT VALUE		639,940

PERMIT NUM	DESCRIPTION	AMT	ISSUED
R09239	REPAIR/RRF	3,000	05/01/2006

SALES DATA

OFF RECORD Number	DATE	TYPE INST	Q / U	V / I	RSN CD	SALE PRICE
2397/0433	9/28/2020	WD	Q	I	01	520,000
GRANTOR: DAVIS DONNIE C & LOUI						
GRANTEE: JOHNSON NICHOLAS B						
0896/0219	8/20/1999	QC	U	I	07	100
GRANTOR: DAVIS DONNIE ETAL						
GRANTEE: DAVIS DONNIE & LOUI						

BUILDING NOTES

BUILDING DIMENSIONS

FOP=[YR=2009] W4 FGR=[YR=2008] W7 STR=[YR=2009] N6 W8 S2 W15 S4 E23$ W23 S32 E30 N32$ S32 W30 N32 W9 S36 E43 N36$ PTR=E15 BAS=[YR=2009] E30 S12 E1 S8 W1 S12 W30 N32$ W15$.

EXTRA FEATURES

LN	OB/XF CODE	DESCRIPTION	BLD	CAP	L	W	UNITS	UT	Adj R	ADJ UNIT PRICE	ORIG COND	YEAR ON	YEAR ACTUAL	Q	% COND	OB/XF MKT VALUE	NOTES

LAND DESCRIPTION

TOTAL OB/XF 0

LN	USE CODE	CLS	LAND USE DESCRIPTION	CAP	RD	LOC ZONE	FRONT	DEPTH	TOT LND UTS	UNIT TYPE	DT	DPTH FACT	% COND	TOT ADJ	UNIT PRICE	ADJ UNIT PRICE	LAND VALUE	OTHER ADJUSTMENTS AND NOTES	YEAR	DENSITY	DECL	FRZ	YR	CONSRV

REVIEW DATE 09/23/2019 BY TWX Total Acres: 5.71 Total Land Value: 111,345 Market: 0 Agricultural: 0 Common: 111,345 PRINTED 07/30/2025 BY SYS