PT SE1/4 OF SEC 30-3N-24E IN
IN OR 2213/520

HIGHTMAN PHILIP C & DIANE M
15453 CR 108
HILLIARD, FL 32046

2025

30-3N-24-0000-0003-0050

NASSAU COUNTY PROPERTY

BUILDING CHARACTERISTICS

ELEMENT	CD	CONSTRUCTION
Exterior Wall	20	FACE BRICK 100
Roof Structur	08	IRREGULAR 100
Roof Cover	03	COMP SHNGL 100
Interior Wall	05	DRYWALL 100
Interior Floo	11	CLAY TILE 100
Air Condition	03	CENTRAL 100
Heating Type	04	AIR DUCTED 100
Bedrooms		3 100
Bathrooms		4 100
Frame	02	WOOD FRAME 100
Stories	3.	3. 100
Units		0 100
Occupancy	00	NONE 100
Quality	03	Quality Level 03
DOR CODE	0100	SINGLE FAMILY
MAP NUM		MKT AREA 09
NEIGHBORHOOD/LOC	9001.00	

AREA TYPE	TOTAL GROSS AREA	PCT OF BASE	YEAR	TOT ADJ AREA	SUBAREA MARKET VALUE
AOF	336	110	2003	370	45,736
BAS	2,601	100	2003	2,601	321,514
FCP	1,470	25	2003	368	45,489
FEP	263	80	2003	210	25,958
FGR	852	55	2003	469	57,974
FOP	321	30	2003	96	11,867
FOP	345	30	2003	104	12,856
FOP	1,237	30	2003	371	45,860
FOP	1,532	30	2003	460	56,861
FOP	1,556	30	2003	467	57,726
TOTALS	16,133			10,597	1,309,912

MARKET ADJUSTMENTS

TYPE	MDL	EFF. AREA	TOT ADJ PTS	EFF. BASE RATE	REPL. COST NEW	AYB	EYB	ECON	FNCT		NORM	% COND
0900	01	10,597	111.1500	146.72	1,554,792	2003	2003	0	0	0	15.75	84.25

1 SNGL FAM – 100% - 0 Heated Area: 7831 HX Base Yr 2004

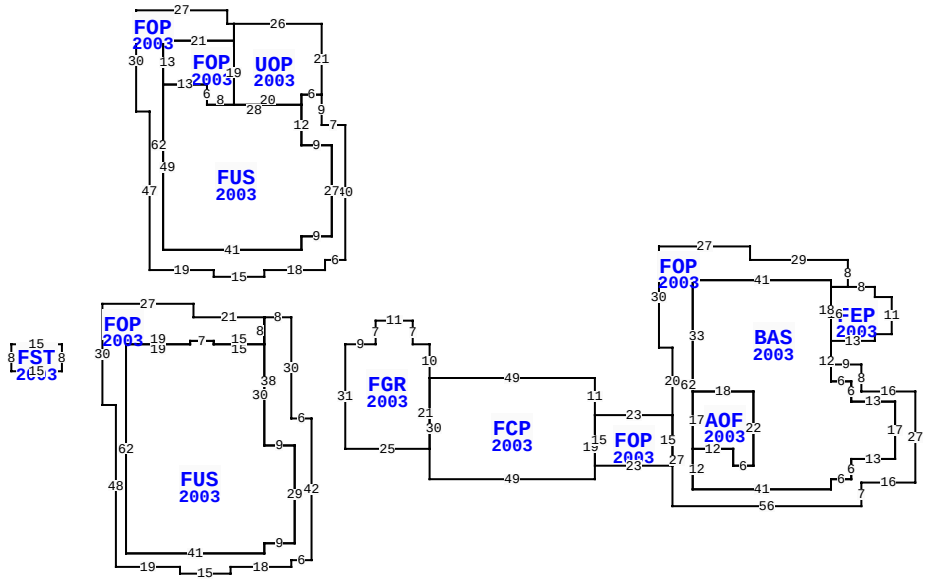

** This building has 14 Sub-Areas

15453 CR 108, HILLIARD

BLD DATE		LGL DATE	
XF DATE		LAND DATE	05/21/2025 MLU
INC DATE		AG DATE	

VALUATION SUMMARY

VALUATION BY		STANDARD
Tax Group: 4	Tax Dist:	
BUILDING MARKET VALUE		1,309,912
TOTAL MARKET OB/XF VALUE		23,626
TOTAL LAND VALUE - MARKET		89,100
TOTAL MARKET VALUE		1,422,638
SOH/AGL Deduction		511,100
ASSESSED VALUE		911,538
TOTAL EXEMPTION VALUE	HX HB	50,722
BASE TAXABLE VALUE		860,816
TOTAL JUST VALUE		1,422,638
NCON VALUE		0
INCOME VALUE		
PREVIOUS YEAR MKT VALUE		1,334,768

PERMIT NUM	DESCRIPTION	AMT	ISSUED
19008560	REMODEL	25,225	08/09/2019
B029718	NEW CONSTR	1,000,000	05/01/2002
B018552	NEW CONSTR	900,000	07/01/2001

SALES DATA

OFF RECORD Number	DATE	TYPE INST	Q / U	V / I	RSN CD	SALE PRICE
2213/0520	7/18/2018	WD	U	I	11	100
GRANTOR: HIGHTMAN PHILIP C & D						
GRANTEE: HIGHTMAN PHILIP C &						
2077/1046	9/19/2016	QC	U	I	11	100
GRANTOR: HIGHTMAN PHILIP C & D						
GRANTEE: HIGHTMAN PHILIP C &						

BUILDING NOTES

EXTRA FEATURES

LN	OB/XF CODE	DESCRIPTION	BLD	CAP	L	W	UNITS	UT	Adj R	ADJ UNIT PRICE	ORIG COND	YEAR ON	YEAR ACTUAL	Q	% COND	OB/XF MKT VALUE	NOTES
1	1127	BRICK 8"	0	100	0	0	315.00	SF	11.00	11.00	100	2003	2003	3	95	3,292	
2	0812	CONCRETE C	0	100	0	0	5,675.00	SF	4.00	4.00	100	2003	2003	3	82	18,614	
3	0504	FP-ELECTRI	0	100	0	0	1.00	UT	2,000.00	2,000.00	100	2003	2003	3	86	1,720	

BUILDING DIMENSIONS

FUS=[YR=2003] W15 N1 W7 S1 W19 S62 E41 N3 E9 N29 W9 N30 $
FOP=[YR=2003] N8 W21 N4 W27 S30 E4 S48 E19 S2 E15 N2 E18 N2
E6 N42 W6 N30 W8 S38 E9 S29 W9 S3 W41 N62 E19 N1 E7 S1 E15 $
PTR= E24 FGR=[YR=2003] E9 N7 E11 S7 E5 S10 FCP=[YR=2003] E49
S11 FOP=[YR=2003] E23 FOP=[YR=2003] N20 W4 N30 E27 S4 E29
S8 FEP=[YR=2003] E8 S3 E5 S11 W5 S2 W13 BAS=[YR=2003] S12
E6 S6 E13 S17 W13 S6 W6 S3 W41 N12 AOF=[YR=2003] E12 S5 E6
N22 W18 S17 $ E12 S5 E6 N22 W18 N33 E41 S18 $ N16 E5 $ W5 N2
W41 S62 E41 N3 E6 N6 E13 N17 W13 N6 W6 N5 E9 S8 E16 S27 W16
S7 W56 N27 $ S15 W23 N15 $ S19 W49 N30 $ S21 W25 N31 $ W24 $
PTR= N20 FOP=[YR=2003] N2 E18 N3 E6 N40 W7 N9 UOP=[YR=2003]
N21 W26S5 FOP=[YR=2003] W21 S13 E13 S6 E8 N19 $ S19E20 N3 E6

LAND DESCRIPTION

TOTAL OB/XF 23,626

LN	USE CODE	CLS	LAND USE DESCRIPTION	CAP	RD	LOC ZONE	FRONT	DEPTH	TOT LND UTS	UNIT TYPE	DT	DPTH FACT	% COND	TOT ADJ	UNIT PRICE	ADJ UNIT PRICE	LAND VALUE	OTHER ADJUSTMENTS AND NOTES	YEAR	DENSITY	DECL	FRZ	YR	CONSRV
1	000100	C	RES	100		OR	0.00	0.00	1.98	AC		1.00	1.00	1.00	45,000.00	45,000.00	89,100							

REVIEW DATE 05/12/2019 BY KBA Total Acres: 1.98 Total Land Value: 89,100 Market: 0 Agricultural: 0 Common: 89,100 PRINTED 07/30/2025 BY SYS