LOT 164
AMELIA CONCOURSE PH 3 UNIT A
OR 2365/1252

BEACH ALAN WAYNE & AJA SHARYL
94950 WINDFLOWER TRAIL
FERNANDINA BEACH, FL 32034

2025

30-2N-28-0152-0164-0000

BUILDING CHARACTERISTICS

ELEMENT	CD	CONSTRUCTION
Exterior Wall	31	HARDIE BRD 100
Roof Structur	03	GABLE/HIP 100
Roof Cover	03	COMP SHNGL 100
Interior Wall	05	DRYWALL 100
Interior Floo	13	LVT/LAMNT 100
Air Condition	03	CENTRAL 100
Heating Type	04	AIR DUCTED 100
Bedrooms		5 100
Bathrooms		4 100
Frame	02	WOOD FRAME 100
Stories	2.	2. 100
Units		0 100
Occupancy	00	NONE 100
Quality	04	Quality Level 04

DOR CODE 0100 SINGLE FAMILY
MAP NUM | MKT AREA 04
NEIGHBORHOOD/LOC 4067.200

AREA TYPE	TOTAL GROSS AREA	PCT OF BASE	YEAR	TOT ADJ AREA	SUBAREA MARKET VALUE
BAS	1,420	100	2022	1,420	152,862
FGR	640	55	2022	352	37,893
FOP	134	30	2022	40	4,306
FSP	400	40	2022	160	17,223
FUS	1,441	100	2022	1,441	155,122
STR	80	10	2022	8	862
TOTALS	4,115			3,421	368,267

MARKET ADJUSTMENTS

TYPE	MDL	EFF. AREA	TOT ADJ PTS	EFF. BASE RATE	REPL. COST NEW	AYB	EYB	ECON	FNCT		NORM	% COND
0100	01	3,421	108.1920	108.19	370,118	2022	2022	0	0	0	0.50	99.50

1 SINGLE FAM – 100% - 2023 Heated Area: 2861 HX Base Yr 2023

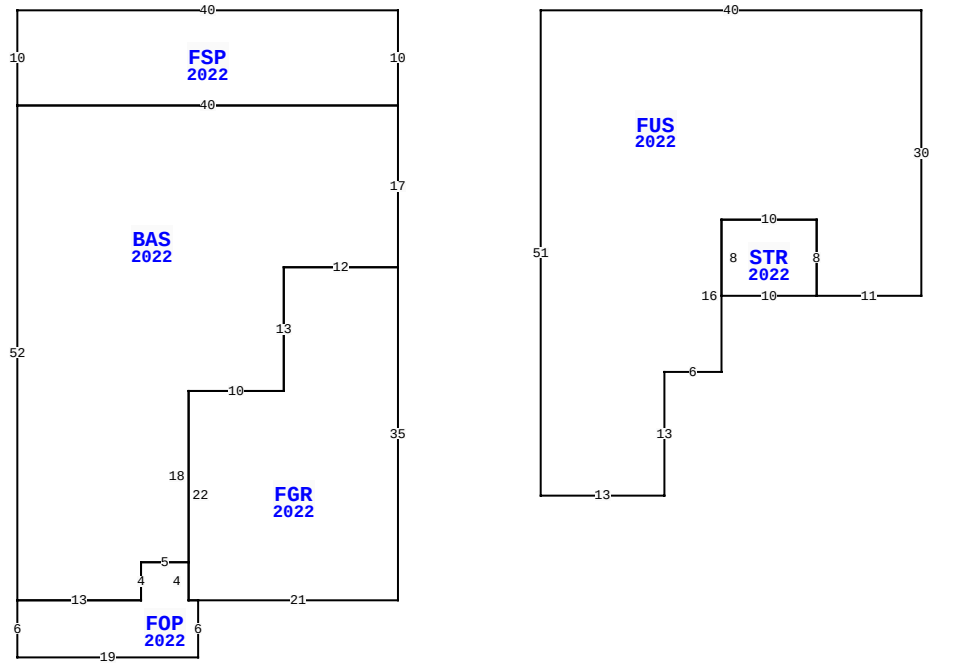

BLD DATE	03/03/2023	NW	LGL DATE
XF DATE			LAND DATE 04/23/2025 MLU
INC DATE			AG DATE

94950 WINDFLOWER TR, FERNANDINA BEACH

NASSAU COUNTY PROPERTY

PAGE 1 of 1 4

VALUATION SUMMARY

VALUATION BY		STANDARD
Tax Group: 4	Tax Dist:	
BUILDING MARKET VALUE		368,267
TOTAL MARKET OB/XF VALUE		11,975
TOTAL LAND VALUE - MARKET		85,000
TOTAL MARKET VALUE		465,242
SOH/AGL Deduction		18,724
ASSESSED VALUE		446,518
TOTAL EXEMPTION VALUE	HX HB	50,722
BASE TAXABLE VALUE		395,796
TOTAL JUST VALUE		465,242
NCON VALUE		0
INCOME VALUE		
PREVIOUS YEAR MKT VALUE		438,774

PERMIT NUM	DESCRIPTION	AMT	ISSUED
C2110157	CO ISSUED	0	01/27/2022
B2110157	NEW CONSTR	418,464	08/03/2021

SALES DATA

OFF RECORD Number	DATE	TYPE INST	Q / U	V / I	RSN CD	SALE PRICE
2536/0740	1/14/2022	WD	Q	I	01	439,400
GRANTOR: DREAM FINDERS HOMES L						
GRANTEE: BEACH ALAN WAYNE &						
2468/1408	6/04/2021	WD	U	V	30	496,000
GRANTOR: DFC AMELIA CONCOURSE						
GRANTEE: DREAM FINDERS HOMES						

BUILDING NOTES

BUILDING DIMENSIONS

FSP=[YR=2022] W40 S10 BAS=[YR=2022] S52 FOP=[YR=2022] S6 E19 N6 FGR=[YR=2022] E21 N35 W12 S13 W10 S22 E1$ W1 N4 W5 S4 W13$ E13 N4 E5 N18 E10 N13 E12 N17 W40$ E40 N10$ PTR= E15 FUS=[YR=2022] E40 S30 W11 STR=[YR=2022] W10 N8 E10 S8$ N8 W10 S16 W6 S13 W13 N51$ W15$.

EXTRA FEATURES

LN	OB/XF CODE	DESCRIPTION	BLD	CAP	L	W	UNITS	UT	Adj R	ADJ UNIT PRICE	ORIG COND	YEAR ON	YEAR ACTUAL	Q	% COND	OB/XF MKT VALUE	NOTES
1	0811	CONCRETE B	0	100	0	0	991.00	SF	5.20	5.20	100	2022	2022	3	99	5,102	
2	0476	VF 6 SBPL	0	100	0	0	108.00	LF	32.00	32.00	100	2022	2022	3	98	3,387	
3	0470	VNYL GATE	0	100	0	0	1.00	UT	300.00	300.00	100	2022	2022	3	98	294	
4	0462	ST/AL FNC	0	100	0	0	336.00	SF	10.00	10.00	100	2022	2022	3	95	3,192	

LAND DESCRIPTION

TOTAL OB/XF 11,975

LN	USE CODE	CLS	LAND USE DESCRIPTION	CAP	RD	LOC ZONE	FRONT	DEPTH	TOT LND UTS	UNIT TYPE	DT	DPTH FACT	% COND	TOT ADJ	UNIT PRICE	ADJ UNIT PRICE	LAND VALUE	OTHER ADJUSTMENTS AND NOTES	YEAR	DENSITY	DECL	FRZ	YR	CONSRV
1	000100	C	RES	100		RSF-2	0.00	0.00	1.00	LT		1.00	1.00	1.00	85,000.00	85,000.00	85,000							

REVIEW DATE 05/03/2022 BY DJ Total Acres: 0.00 Total Land Value: 85,000 Market: 0 Agricultural: 0 Common: 85,000 PRINTED 07/30/2025 BY SYS