LOT 128
AMELIA CONCOURSE PH 3 UNIT C
OR 2369/448

JONES AMANDA L & JAMES R
95274 CORNFLOWER DR
YULEE, FL 32034

2025

30-2N-28-0152-0128-0000

NASSAU COUNTY PROPERTY

BUILDING CHARACTERISTICS

ELEMENT	CD	CONSTRUCTION
Exterior Wall	31	HARDIE BRD 100
Roof Structur	03	GABLE/HIP 100
Roof Cover	03	COMP SHNGL 100
Interior Wall	05	DRYWALL 100
Interior Floo	13	LVT/LAMNT 50
Interior Floo	14	CARPET 50
Air Condition	03	CENTRAL 100
Heating Type	04	AIR DUCTED 100
Bedrooms		6 100
Bathrooms		3 100
Frame	02	WOOD FRAME 100
Stories	0	0 100
Units		0 100
Occupancy	00	NONE 100
Quality	04	Quality Level 04

DOR CODE 0100 SINGLE FAMILY
MAP NUM | MKT AREA 04
NEIGHBORHOOD/LOC 4067.200

AREA TYPE	TOTAL GROSS AREA	PCT OF BASE	YEAR	TOT ADJ AREA	SUBAREA MARKET VALUE
BAS	2,215	100	2021	2,215	240,248
FGR	380	55	2021	209	22,669
FOP	50	30	2021	15	1,627
FOP	128	30	2021	38	4,121
FUS	470	100	2021	470	50,978
PTO	128	5	2021	6	650
STR	24	10	2021	2	217
TOTALS	3,395			2,955	320,512

MARKET ADJUSTMENTS

TYPE	MDL	EFF. AREA	TOT ADJ PTS	EFF. BASE RATE	REPL. COST NEW	AYB	EYB	ECON	FNCT		NORM	% COND
0100	01	2,955	109.5570	109.56	323,750	2021	2021	0	0	0	1.00	99.00

1 SINGLE FAM – 100% - 2022 Heated Area: 2685 HX Base Yr 2022

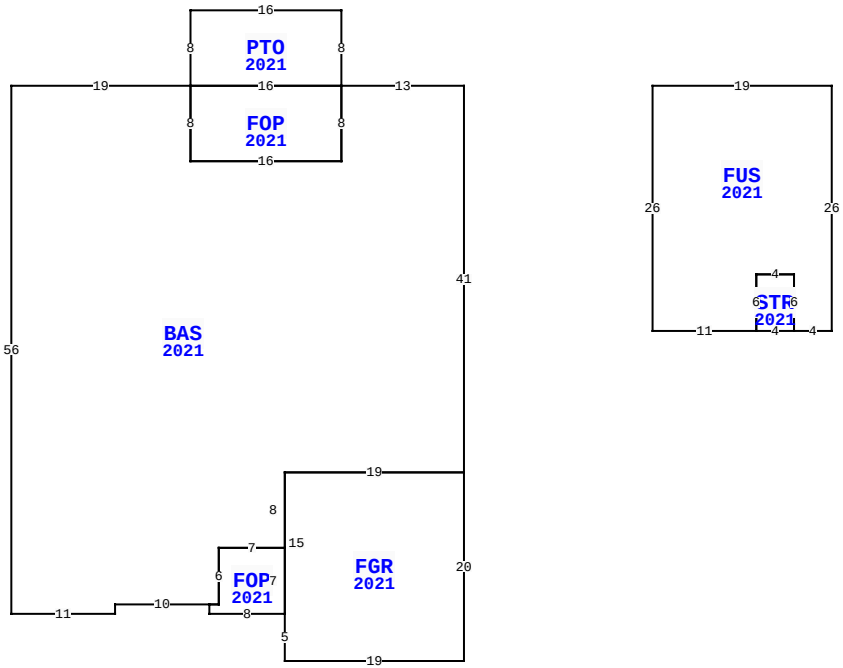

95274 CORNFLOWER DR, FERNANDINA BEACH

BLD DATE	03/03/2023 NW	LGL DATE	
XF DATE		LAND DATE	04/23/2025 MLU
INC DATE		AG DATE	

NASSAU COUNTY PROPERTY — VALUATION SUMMARY

VALUATION BY		STANDARD
Tax Group: 4	Tax Dist:	
BUILDING MARKET VALUE		320,512
TOTAL MARKET OB/XF VALUE		3,691
TOTAL LAND VALUE - MARKET		85,000
TOTAL MARKET VALUE		409,203
SOH/AGL Deduction		75,193
ASSESSED VALUE		334,010
TOTAL EXEMPTION VALUE	HX HB VX	55,722
BASE TAXABLE VALUE		278,288
TOTAL JUST VALUE		409,203
NCON VALUE		0
INCOME VALUE		
PREVIOUS YEAR MKT VALUE		384,709

PERMIT NUM	DESCRIPTION	AMT	ISSUED
B2108002	NEW CONSTR	377,928	06/18/2021

SALES DATA

OFF RECORD Number	DATE	TYPE INST	Q / U	V / I	RSN CD	SALE PRICE
2518/0915	11/29/2021	WD	Q	I	01	439,000
GRANTOR: DREAM FINDERS HOMES L						
GRANTEE: JONES AMANDA L & JA						
2468/1408	6/04/2021	WD	U	V	30	496,000
GRANTOR: DFC AMELIA CONCOURSE						
GRANTEE: DREAM FINDERS HOMES						

BUILDING NOTES

BUILDING DIMENSIONS

BAS=[YR=2021] W13 PTO=[YR=2021] N8 W16 S8 FOP=[YR=2021] S8 E16 N8 W16$ E16$ S8 W16 N8 W19 S56E11N1 E10 FOP=[YR=2021] S1 E8 FGR=[YR=2021] S5 E19 N20 W19 S15$ N7 W7 S6 W1$ E1 N6 E7 N8 E19 N41$ PTR=E20 FUS=[YR=2021] E19 S26 W4 STR=[YR=2021] W4 N6 E4 S6$ N6 W4 S6 W11 N26$ W20$.

EXTRA FEATURES

LN	OB/XF CODE	DESCRIPTION	BLD	CAP	L	W	UNITS	UT	Adj R	ADJ UNIT PRICE	ORIG COND	YEAR ON	YEAR ACTUAL	Q	% COND	OB/XF MKT VALUE	NOTES
1	0811	CONCRETE B	0	100	0	0	717.00	SF	5.20	5.20	100	2021	2021	3	99	3,691	

LAND DESCRIPTION

TOTAL OB/XF 3,691

LN	USE CODE	CLS	LAND USE DESCRIPTION	CAP	RD	LOC ZONE	FRONT	DEPTH	TOT LND UTS	UNIT TYPE	DT	DPTH FACT	% COND	TOT ADJ	UNIT PRICE	ADJ UNIT PRICE	LAND VALUE	OTHER ADJUSTMENTS AND NOTES	YEAR	DENSITY	DECL	FRZ	YR	CONSRV
1	000100	C	RES	100		RSF-2	0.00	0.00	1.00	LT		1.00	1.00	1.00	85,000.00	85,000.00	85,000							

REVIEW DATE 12/01/2021 BY TWDJ Total Acres: 0.00 Total Land Value: 85,000 Market: 0 Agricultural: 0 Common: 85,000 PRINTED 07/30/2025 BY SYS