LOT 81
IN OR 2205/1250
AMELIA CONCOURSE SUB PHASE 2

LABARGE TROY J & ELIZABETH A
95271 SNAPDRAGON DRIVE
FERNANDINA BEACH, FL 32034

2025

30-2N-28-0151-0081-0000

BUILDING CHARACTERISTICS

ELEMENT	CD	CONSTRUCTION
Exterior Wall	31	HARDIE BRD 100
Roof Structur	03	GABLE/HIP 100
Roof Cover	03	COMP SHNGL 100
Interior Wall	05	DRYWALL 100
Interior Floo	11	CLAY TILE 50
Interior Floo	14	CARPET 50
Air Condition	03	CENTRAL 100
Heating Type	04	AIR DUCTED 100
Bedrooms		4 100
Bathrooms		3 100
Frame	02	WOOD FRAME 100
Stories	1.5	1.5 100
Units		0 100
Occupancy	00	NONE 100
Quality	04	Quality Level 04

DOR CODE 0100 SINGLE FAMILY
MAP NUM | MKT AREA 04
NEIGHBORHOOD/LOC 4067.100

AREA TYPE	TOTAL GROSS AREA	PCT OF BASE	YEAR	TOT ADJ AREA	SUBAREA MARKET VALUE
BAS	2,440	100	2018	2,440	263,141
FGR	447	55	2018	246	26,530
FOP	240	30	2018	72	7,765
FOP	240	30	2018	72	7,765
FUS	372	100	2018	372	40,118
STR	60	10	2018	6	647
TOTALS	3,799			3,208	345,966

MARKET ADJUSTMENTS

TYPE	MDL	EFF. AREA	TOT ADJ PTS	EFF. BASE RATE	REPL. COST NEW	AYB	EYB	ECON	FNCT		NORM	% COND
0100	01	3,208	110.6070	110.61	354,837	2018	2018	0	0	0	2.50	97.50

1 SINGLE FAM – 100% - 2025 Heated Area: 2812 HX Base Yr

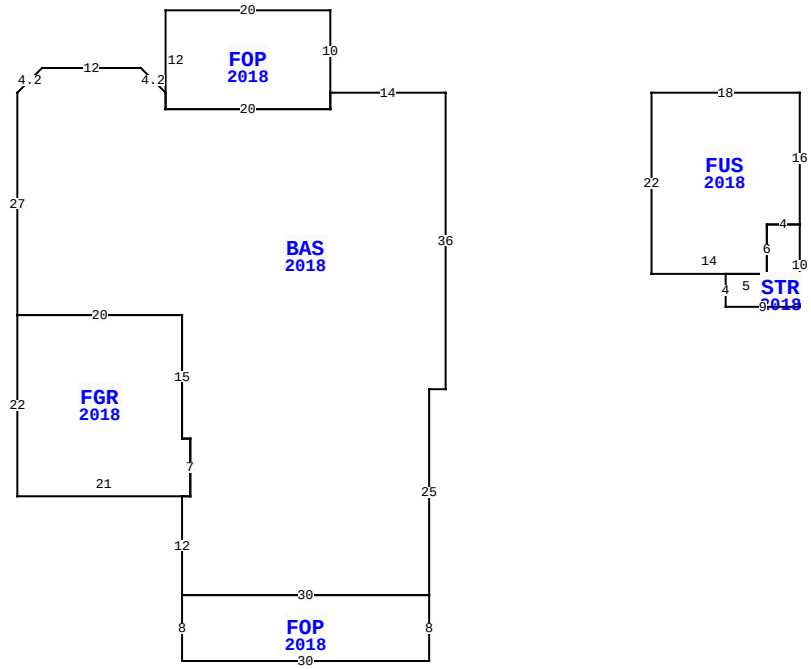

95271 SNAPDRAGON DR, FERNANDINA BEACH

BLD DATE	03/29/2023 NW	LGL DATE	
XF DATE		LAND DATE	04/23/2025 MLU
INC DATE		AG DATE	

NASSAU COUNTY PROPERTY

PAGE 1 of 1 4

VALUATION SUMMARY

VALUATION BY		STANDARD
Tax Group: 4	Tax Dist:	
BUILDING MARKET VALUE		345,966
TOTAL MARKET OB/XF VALUE		36,835
TOTAL LAND VALUE - MARKET		85,000
TOTAL MARKET VALUE		467,801
SOH/AGL Deduction		0
ASSESSED VALUE		467,801
TOTAL EXEMPTION VALUE	13	467,801
BASE TAXABLE VALUE		0
TOTAL JUST VALUE		467,801
NCON VALUE		0
INCOME VALUE		
PREVIOUS YEAR MKT VALUE		443,215

PERMIT NUM	DESCRIPTION	AMT	ISSUED
B1901064	SCRN ENCLSRE	25,573	02/01/2019
B1906909	SWIM POOL	35,000	01/01/2019
18003126	CO ISSUED	0	03/27/2018
B1706249	NEW CONSTR	351,787	07/13/2017

SALES DATA

OFF RECORD Number	DATE	TYPE INST	Q / U	V / I	RSN CD	SALE PRICE
2205/1250	6/21/2018	WD	Q	I	02	332,400
GRANTOR: DREAM FINDERS HOMES L						
GRANTEE: LABARGE TROY J & EL						
2145/0071	9/06/2017	WD	U	V	30	180,000
GRANTOR: DFH AMELIA LLC						
GRANTEE: DREAM FINDERS HOMES						

BUILDING NOTES

BUILDING DIMENSIONS

BAS=[YR=2018] W14 FOP=[YR=2018] N10 W20 S12 E20 N2$ S2 W20 N2 U3 L3 W12 D3 L3 S27 FGR=[YR=2018] S22 E21 N7 W1 N15 W20$ E20 S15 E1 S7 W1 S12 FOP=[YR=2018] S8 E30 N8 W30$ E30 N25 E2 N36$ PTR= E25 FUS=[YR=2018] E18 S16 STR=[YR=2018] S10 W9 N4 E5 N6 E4$ W4 S6 W14 N22$ W25$.

EXTRA FEATURES

LN	OB/XF CODE	DESCRIPTION	BLD	CAP	L	W	UNITS	UT	Adj R	ADJ UNIT PRICE	ORIG COND	YEAR ON	YEAR ACTUAL	Q	% COND	OB/XF MKT VALUE	NOTES
1	0810	CONCRETE A	0	100	19	3	57.00	SF	6.50	6.50	100	2018	2018	3	97	359	
2	0811	CONCRETE B	0	100	0	0	976.00	SF	5.20	5.20	100	2018	2018	3	97	4,923	
3	0861	POOL GUNIT	0	100	20	9	180.00	SF	85.00	85.00	100	2019	2019	3	87	13,311	
4	0845	KOOL DECK	0	100	0	0	435.00	SF	7.25	7.25	100	2019	2019	3	97	3,059	
5	0910	SCRN RM L	0	100	0	0	615.00	SF	15.00	15.00	100	2019	2019	3	82	7,565	
6	0476	VF 6 SBPL	0	100	0	0	240.00	LF	32.00	32.00	100	2018	2018	3	92	7,066	
7	0470	VNYL GATE	0	100	0	0	2.00	UT	300.00	300.00	100	2018	2018	3	92	552	

LAND DESCRIPTION

TOTAL OB/XF 36,835

LN	USE CODE	CLS	LAND USE DESCRIPTION	CAP	RD	LOC ZONE	FRONT	DEPTH	TOT LND UTS	UNIT TYPE	DT	DPTH FACT	% COND	TOT ADJ	UNIT PRICE	ADJ UNIT PRICE	LAND VALUE	OTHER ADJUSTMENTS AND NOTES	YEAR	DENSITY	DECL	FRZ	YR	CONSRV
1	000100	C	RES	100		RSF-2	0.00	0.00	1.00	LT		1.00	1.00	1.00	85,000.00	85,000.00	85,000							

REVIEW DATE 04/17/2019 BY TW Total Acres: 0.00 Total Land Value: 85,000 Market: 0 Agricultural: 0 Common: 85,000 PRINTED 07/30/2025 BY SYS