LOT 29
IN OR 1823/1412
EX MINERAL RIGHTS

FRIEDMAN MICHAEL J & KIMBERLY A
95305 WINDFLOWER TRAIL
FERNANDINA BEACH, FL 32034

2025

30-2N-28-0150-0029-0000

NASSAU COUNTY PROPERTY

BUILDING CHARACTERISTICS

ELEMENT	CD	CONSTRUCTION
Exterior Wall	31	HARDIE BRD 70
Exterior Wall	16	WD FR STUC 30
Roof Structur	03	GABLE/HIP 100
Roof Cover	03	COMP SHNGL 100
Interior Wall	05	DRYWALL 100
Interior Floo	14	CARPET 70
Interior Floo	11	CLAY TILE 30
Air Condition	03	CENTRAL 100
Heating Type	04	AIR DUCTED 100
Bedrooms		3 100
Bathrooms		2 100
Frame	02	WOOD FRAME 100
Stories	1.	1. 100
Units		0 100
Occupancy	00	NONE 100
Quality	04	Quality Level 04
DOR CODE	0100	SINGLE FAMILY
MAP NUM		MKT AREA 04
NEIGHBORHOOD/LOC	4067.00	

AREA TYPE	TOTAL GROSS AREA	PCT OF BASE	YEAR	TOT ADJ AREA	SUBAREA MARKET VALUE
BAS	2,156	100	2012	2,156	227,401
FGR	600	55	2012	330	34,807
FOP	30	30	2012	9	949
FOP	120	30	2012	36	3,797
PTO	25	5	2012	1	106
TOTALS	2,931			2,532	267,060

MARKET ADJUSTMENTS

TYPE	MDL	EFF. AREA	TOT ADJ PTS	EFF. BASE RATE	REPL. COST NEW	AYB	EYB	ECON	FNCT		NORM	% COND
0100	01	2,532	111.7872	111.79	283,052	2012	2012	0	0	0	5.65	94.35

1 SINGLE FAM – 100% - 2013 Heated Area: 2156 HX Base Yr 2013

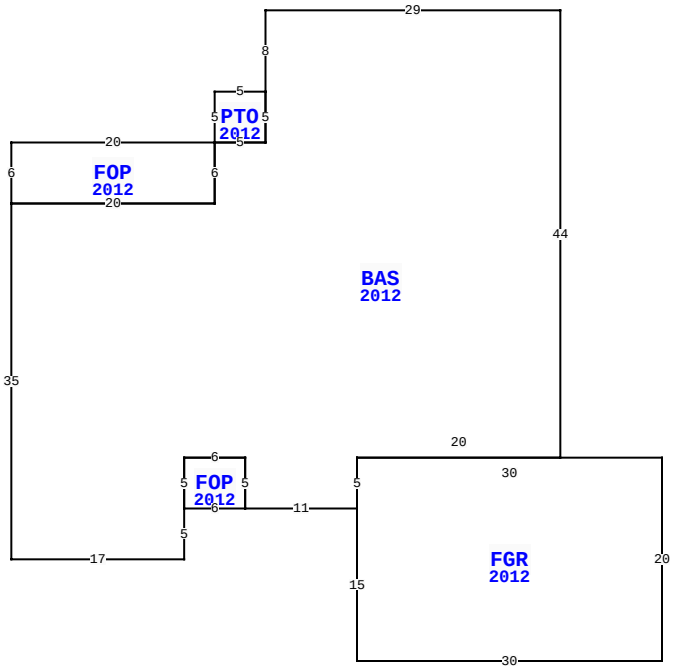

95305 WINDFLOWER TRL, FERNANDINA BEACH

BLD DATE	03/29/2023 NW	LGL DATE	
XF DATE		LAND DATE	04/23/2025 MLU
INC DATE		AG DATE	

VALUATION SUMMARY

VALUATION BY		STANDARD
Tax Group: 4	Tax Dist:	
BUILDING MARKET VALUE		267,060
TOTAL MARKET OB/XF VALUE		13,556
TOTAL LAND VALUE - MARKET		85,000
TOTAL MARKET VALUE		365,616
SOH/AGL Deduction		168,834
ASSESSED VALUE		196,782
TOTAL EXEMPTION VALUE	HX HB VX	55,722
BASE TAXABLE VALUE		141,060
TOTAL JUST VALUE		365,616
NCON VALUE		0
INCOME VALUE		
PREVIOUS YEAR MKT VALUE		343,836

PERMIT NUM	DESCRIPTION	AMT	ISSUED
C1226228	CO ISSUED	0	11/01/2012
M17552	H/AC	0	08/01/2012
E25275	NEW CONSTR	0	07/01/2012
B26228	NEW CONSTR	237,561	07/01/2012

SALES DATA

OFF RECORD Number	DATE	TYPE INST	Q U	V I	RSN CD	SALE PRICE
1823/1412	11/05/2012	WD	Q	I	01	186,600
GRANTOR: D R HORTON INC-JACKSO						
GRANTEE: FRIEDMAN MICHAEL J						
1802/1931	7/03/2012	WD	U	I	11	100
GRANTOR: D R HORTON INC-JACKSO						
GRANTEE: DRH ENERGY INC						

BUILDING NOTES

EXTRA FEATURES

LN	OB/XF CODE	DESCRIPTION	BLD	CAP	L	W	UNITS	UT	Adj R	ADJ UNIT PRICE	ORIG COND	YEAR ON	YEAR ACTUAL	Q	% COND	OB/XF MKT VALUE	NOTES
1	0811	CONCRETE B	0	100	0	0	1,567.00	SF	5.20	5.20	100	2012	2012	3	92	7,497	
2	0470	VNYL GATE	0	100	0	0	2.00	UT	300.00	300.00	100	2012	2012	3	81	486	
3	0476	VF 6 SBPL	0	100	0	0	215.00	LF	32.00	32.00	100	2012	2012	3	81	5,573	

BUILDING DIMENSIONS

BAS=[YR=2012] W29 S8 PTO=[YR=2012] W5 S5 E5 N5 $S5W5
FOP=[YR=2012] W20 S6 E20 N6 $ S6 W20 S35 E17 N5
FOP=[YR=2012] E6 N5 W6 S5 $ N5 E6 S5 E11 FGR=[YR=2012] S15 E30 N20 W30 S5 $ N5 E20 N44 $.

LAND DESCRIPTION

TOTAL OB/XF 13,556

LN	USE CODE	CLS	LAND USE DESCRIPTION	CAP	RD	LOC ZONE	FRONT	DEPTH	TOT LND UTS	UNIT TYPE	DT	DPTH FACT	% COND	TOT ADJ	UNIT PRICE	ADJ UNIT PRICE	LAND VALUE	OTHER ADJUSTMENTS AND NOTES	YEAR	DENSITY	DECL	FRZ	YR	CONSRV
1	000100	C	RES	100		RSF-2	0.00	0.00	1.00	LT		1.00	1.00	1.00	85,000.00	85,000.00	85,000							

REVIEW DATE 01/06/2023 BY DJA Total Acres: 0.00 Total Land Value: 85,000 Market: 0 Agricultural: 0 Common: 85,000 PRINTED 07/30/2025 BY SYS