PT N1/2 OF SEC 30-2N-24E & PT NW1/4 OF SEC 29-2N-24E & PT OF SE1/4 OF SW1/4 OF

GEIGER ZENOUS RICHARD JR
28714 YELLOW ROSE LN
HILLIARD, FL 32046

2025

30-2N-24-0000-0001-0030

NASSAU COUNTY PROPERTY

BUILDING CHARACTERISTICS

ELEMENT	CD	CONSTRUCTION
Exterior Wall	20	FACE BRICK 100
Roof Structur	03	GABLE/HIP 100
Roof Cover	03	COMP SHNGL 100
Interior Wall	05	DRYWALL 100
Interior Floo	14	CARPET 80
Interior Floo	11	CLAY TILE 20
Air Condition	03	CENTRAL 100
Heating Type	04	AIR DUCTED 100
Bedrooms		5 100
Bathrooms		3 100
Frame	02	WOOD FRAME 100
Stories	0	0 100
Units		0 100
Occupancy	00	NONE 100
Quality	03	Quality Level 03
DOR CODE	5000	IMPROVED AG
MAP NUM		MKT AREA 08
NEIGHBORHOOD/LOC	8001.00	

AREA TYPE	TOTAL GROSS AREA	PCT OF BASE	YEAR	TOT ADJ AREA	SUBAREA MARKET VALUE
BAS	2,465	100	1993	2,465	184,528
FOP	277	30	1993	83	6,213
UCP	756	20	1993	151	11,304
TOTALS	3,498			2,699	202,045

MARKET ADJUSTMENTS

TYPE	MDL	EFF. AREA	TOT ADJ PTS	EFF. BASE RATE	REPL. COST NEW	AYB	EYB	ECON	FNCT		NORM	% COND
0100	01	2,699	108.0960	108.10	291,762	1979	1979	0	0	0	30.75	69.25

4 SINGLE FAM – 0% - 0 Heated Area: 2465 HX Base Yr

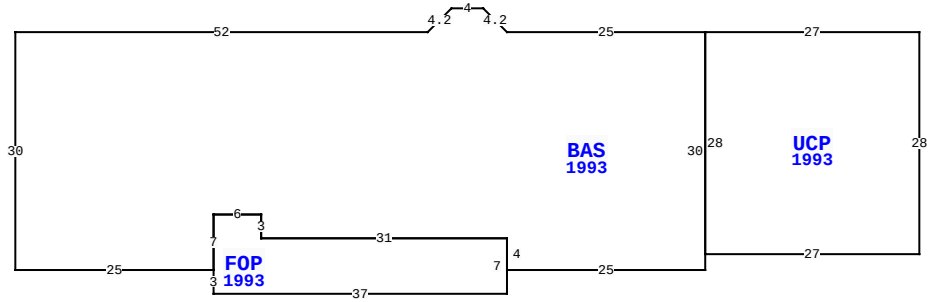

25011 WRIGHTS DAIRY RD, CALLAHAN

BLD DATE		LGL DATE	
XF DATE		LAND DATE	05/21/2025 MLU
INC DATE		AG DATE	01/17/2025 KBA

VALUATION SUMMARY

VALUATION BY	STANDARD
Tax Group: 6	Tax Dist:
BUILDING MARKET VALUE	202,045
TOTAL MARKET OB/XF VALUE	0
TOTAL LAND VALUE - MARKET	764,190
TOTAL MARKET VALUE	335,745
SOH/AGL Deduction	37,229
ASSESSED VALUE	298,516
TOTAL EXEMPTION VALUE	0
BASE TAXABLE VALUE	298,516
TOTAL JUST VALUE	966,235
NCON VALUE	0
INCOME VALUE	
PREVIOUS YEAR MKT VALUE	822,783

PERMIT NUM	DESCRIPTION	AMT	ISSUED

SALES DATA

OFF RECORD Number	DATE	TYPE INST	Q U	V I	RSN CD	SALE PRICE
2125/0650	4/26/2017	WD	U	I	12	1,743,100
GRANTOR: FNB SOUTH						
GRANTEE: ZENOUS RICHARD GEIG						
2042/0470	4/12/2016	WD	U	V	12	1,500,000
GRANTOR: WRIGHT NASSAU COUNTY						
GRANTEE: FNB SOUTH						

BUILDING NOTES

BUILDING DIMENSIONS

UCP=[YR=1993] W27 BAS=[YR=1993] W25 U3 L3 W4 D3 L3 W52 S30 E25 FOP=[YR=1993] S3 E37 N7 W31 N3 W6 S7$ N7 E6 S3 E31 S4 E25 N30$S28 E27 N28$.

EXTRA FEATURES

LN	OB/XF CODE	DESCRIPTION	BLD	CAP	L	W	UNITS	UT	Adj R	ADJ UNIT PRICE	ORIG COND	YEAR ON	YEAR ACTUAL	Q	% COND	OB/XF MKT VALUE	NOTES

LAND DESCRIPTION

TOTAL OB/XF 0

LN	USE CODE	CLS	LAND USE DESCRIPTION	CAP	RD	LOC ZONE	FRONT	DEPTH	TOT LND UTS	UNIT TYPE	DT	DPTH FACT	% COND	TOT ADJ	UNIT PRICE	ADJ UNIT PRICE	LAND VALUE	OTHER ADJUSTMENTS AND NOTES	YEAR	DENSITY	DECL	FRZ	YR	CONSRV
1	005000	C	AGRICULTURAL	0		OR	0.00	0.00	1.00	AC		1.00	1.00	1.00	45,000.00	45,000.00	45,000							
2	006005	A	PASTURE - GR	0		OR	0.00	0.00	239.73	AC		1.00	1.00	1.00	370.00	370.00	88,700							
3	009910	M	MARKET VALUE	0		OR	0.00	0.00	239.73	AC		1.00	1.00	1.00	3,000.00	3,000.00	719,190							

REVIEW DATE 01/14/2021 BY WWA Total Acres: 240.73 Total Land Value: 133,700 Market: 719,190 Agricultural: 88,700 Common: 45,000 PRINTED 07/30/2025 BY SYS