LOT 12 & UNDEVELOPED R/W'S
(EX R/W & ESMT OR 252/359 &
OR 252/361)

MURPHY VALERIE K & EDWARD M
473402 MIDDLE ROAD
HILLIARD, FL 32046

2025

29-4N-25-4210-0012-0000

NASSAU COUNTY PROPERTY

BUILDING CHARACTERISTICS

ELEMENT	CD	CONSTRUCTION
Exterior Wall	30	VINYL 100
Roof Structur	03	GABLE/HIP 100
Roof Cover	03	COMP SHNGL 100
Interior Wall	05	DRYWALL 100
Interior Floo	13	LVT/LAMNT 50
Interior Floo	14	CARPET 50
Air Condition	03	CENTRAL 100
Heating Type	04	AIR DUCTED 100
Bedrooms		4 100
Bathrooms		2 100
Frame	02	WOOD FRAME 100
Stories	2.	2. 100
Units		0 100
Occupancy	00	NONE 100
Quality	03	Quality Level 03

DOR CODE	0100	SINGLE FAMILY	
MAP NUM		MKT AREA	05
NEIGHBORHOOD/LOC	5001.00		

AREA TYPE	TOTAL GROSS AREA	PCT OF BASE	YEAR	TOT ADJ AREA	SUBAREA MARKET VALUE
BAL	78	15	2001	12	1,772
BAS	1,508	100	2001	1,508	222,620
FOP	1,008	30	2001	302	44,583
FUS	1,136	100	2001	1,136	167,703
TOTALS	3,730			2,958	436,677

MARKET ADJUSTMENTS

TYPE	MDL	EFF. AREA	TOT ADJ PTS	EFF. BASE RATE	REPL. COST NEW	AYB	EYB	ECON	FNCT		NORM	% COND
0500	01	2,958	96.8200	152.98	452,515	2001	2016	0	0	0	3.50	96.50

1 SFR CUST – 0% - 2025 Heated Area: 2644 HX Base Yr

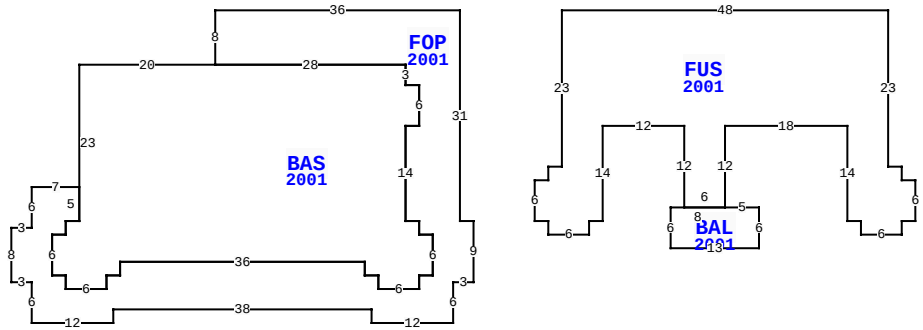

473402 MIDDLE RD, HILLIARD

BLD DATE		LGL DATE	
XF DATE		LAND DATE	05/08/2025 MLU
INC DATE		AG DATE	

VALUATION SUMMARY

VALUATION BY	STANDARD
Tax Group: 4	Tax Dist:
BUILDING MARKET VALUE	436,677
TOTAL MARKET OB/XF VALUE	0
TOTAL LAND VALUE - MARKET	191,880
TOTAL MARKET VALUE	628,557
SOH/AGL Deduction	0
ASSESSED VALUE	628,557
TOTAL EXEMPTION VALUE	0
BASE TAXABLE VALUE	628,557
TOTAL JUST VALUE	628,557
NCON VALUE	276,029
INCOME VALUE	
PREVIOUS YEAR MKT VALUE	334,504

PERMIT NUM	DESCRIPTION	AMT	ISSUED
B0107849	NEW CONSTR	120,288	01/01/2001

SALES DATA

OFF RECORD Number	DATE	TYPE INST	Q / U	V / I	RSN CD	SALE PRICE
2749/1276	10/30/2024	WD	Q	I	01	699,000
GRANTOR: LOPEZ SAMMY						
GRANTEE: MURPHY VALERIE K &						
2702/238	2/21/2024	SW	Q	I	01	369,900
GRANTOR: THERESIDENTIAL CREDIT						
GRANTEE: LOPEZ SAMMY						

BUILDING NOTES

BUILDING DIMENSIONS

FOP=[YR=2001] W36 S8 BAS=[YR=2001] W20 S23 W2 S2 W2 S6 E2 S2 E6 N2 E2 N2 E36 S2 E2 S2 E6 N2 E2 N6 W2 N2 W2 N14 E2 N6 W2 N3 W28 $ E28 S3 E2 S6 W2 S14 E2 S2 E2 S6 W2 S2 W6 N2 W2 N2 W36 S2 W2 S2 W6 N2 W2 N6 E2 N2 E2 N5 W7 S6 W3 S8 E3 S6 E12 N2 E38 S2 E12 N6 E3 N9 W2 N31 $ PTR= E15 FUS=[YR=2001] E48 S23 E2 S2 E2 S6 W2 S2 W6 N2 W2 N14 W18 S12 BAL=[YR=2001] E5 S6 W13 N6 E8 $ W6 N12 W12 S14 W2 S2 W6 N2 W2 N6 E2 N2 E2 N23 $ W15 $.

EXTRA FEATURES

L N	OB/XF CODE	DESCRIPTION	BLD	CAP	L	W	UNITS	UT	Adj R	ADJ UNIT PRICE	ORIG COND	YEAR ON	YEAR ACTUAL	Q	% COND	OB/XF MKT VALUE	NOTES

LAND DESCRIPTION

TOTAL OB/XF 0

L N	USE CODE	CLS	LAND USE DESCRIPTION	CAP	R D	LOC ZONE	FRONT	DEPTH	TOT LND UTS	UNIT TYPE	D T	DPTH FACT	% COND	TOT ADJ	UNIT PRICE	ADJ UNIT PRICE	LAND VALUE	OTHER ADJUSTMENTS AND NOTES	YEAR	DENSITY	DECL	FRZ	YR	CONSRV
1	000100	C	RES	0		OR	0.00	0.00	1.00	AC		1.00	1.00	1.00	19,500.00	19,500.00	19,500							
2	000100	C	RES	0		OR	0.00	0.00	8.84	AC		1.00	1.00	1.00	19,500.00	19,500.00	172,380							

REVIEW DATE 05/14/2024 BY TWX Total Acres: 9.84 Total Land Value: 191,880 Market: 0 Agricultural: 0 Common: 191,880 PRINTED 07/30/2025 BY SYS