LOT 20
AMELIA OAKS PBK 8/85

WILSON RICHARD D & ELLEN M
21 AVALON CT
DOYLESTOWN, PA 18901

2025

29-3N-28-0100-0020-0000

NASSAU COUNTY PROPERTY

BUILDING CHARACTERISTICS

ELEMENT	CD	CONSTRUCTION
Exterior Wall	10	ABOVE AVG 100
Roof Structur	08	IRREGULAR 100
Roof Cover	11	SLATE 100
Interior Wall	05	DRYWALL 100
Interior Floo	11	CLAY TILE 60
Interior Floo	12	HARDWOOD 40
Air Condition	03	CENTRAL 100
Heating Type	04	AIR DUCTED 100
Bedrooms		3 100
Bathrooms		3.5 100
Frame	02	WOOD FRAME 100
Stories	2.	2. 100
Units		0 100
Occupancy	00	NONE 100
Quality	04	Quality Level 04

DOR CODE 0100 SINGLE FAMILY
MAP NUM | MKT AREA 01
NEIGHBORHOOD/LOC 2104.00

AREA TYPE	TOTAL GROSS AREA	PCT OF BASE	YEAR	TOT ADJ AREA	SUBAREA MARKET VALUE
BAS	1,449	100	2016	1,449	307,063
FGR	264	55	2016	145	30,728
FOP	152	30	2016	46	9,748
FSP	150	40	2016	60	12,715
FUS	1,349	100	2016	1,349	285,872
STP	12	10	2016	1	212
STP	24	10	2016	2	424
TOTALS	3,400			3,052	646,761

MARKET ADJUSTMENTS

TYPE	MDL	EFF. AREA	TOT ADJ PTS	EFF. BASE RATE	REPL. COST NEW	AYB	EYB	ECON	FNCT		NORM	% COND
0500	01	3,052	126.3528	219.60	670,219	2016	2016	0	0	0	3.50	96.50

1 SFR CUST – 0% - 2025 Heated Area: 2798 HX Base Yr

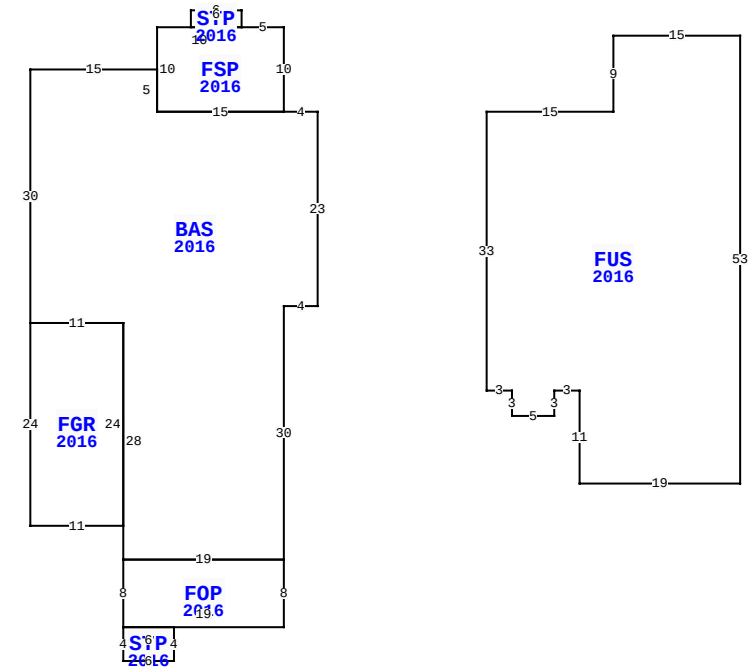

1934 AMELIA OAKS DR, FERNANDINA BEACH

BLD DATE		LGL DATE	
XF DATE		LAND DATE	04/02/2025 MLU
INC DATE		AG DATE	

VALUATION SUMMARY

VALUATION BY	STANDARD
Tax Group: 2	Tax Dist:
BUILDING MARKET VALUE	646,761
TOTAL MARKET OB/XF VALUE	5,245
TOTAL LAND VALUE - MARKET	275,000
TOTAL MARKET VALUE	927,006
SOH/AGL Deduction	0
ASSESSED VALUE	927,006
TOTAL EXEMPTION VALUE	0
BASE TAXABLE VALUE	927,006
TOTAL JUST VALUE	927,006
NCON VALUE	0
INCOME VALUE	
PREVIOUS YEAR MKT VALUE	868,077

PERMIT NUM	DESCRIPTION	AMT	ISSUED
20152210	CO ISSUED	0	06/02/2016
20152210	NEW CONSTR	306,039	10/12/2015

SALES DATA

OFF RECORD Number	DATE	TYPE INST	Q / U	V / I	RSN CD	SALE PRICE
2773/1594	3/12/2025	WD	Q	I	01	1,150,000
GRANTOR: LEBITZ RAYMOND						
GRANTEE: WILSON RICHARD D &						
2275/0261	5/13/2019	TD	Q	I	02	550,000
GRANTOR: PELLEGRINI FAMILY TRU						
GRANTEE: LEBITZ RAYMOND & SA						

BUILDING NOTES

BUILDING DIMENSIONS

BAS=[YR=2016] W4 FSP=[YR=2016] N10 W5 STP=[YR=2016] N2 W6 S2 E6$ W10 S10 E15$ W15 N5 W15 S30 FGR=[YR=2016] S24 E11 N24 W11$ E11 S28 FOP=[YR=2016] S8 STP=[YR=2016] S4 E6 N4 W6 $ E19 N8 W19$ E19 N30 E4 N23$ PTR=E20 FUS=[YR=2016] E15 N9 E15 S53 W19 N11 W3 S3 W5 N3 W3 N33$ W20$.

EXTRA FEATURES

LN	OB/XF CODE	DESCRIPTION	BLD	CAP	L	W	UNITS	UT	Adj R	ADJ UNIT PRICE	ORIG COND	YEAR ON	YEAR ACTUAL	Q	% COND	OB/XF MKT VALUE	NOTES
1	0504	FP-ELECTRI	0	0	0	0	1.00	UT	2,000.00	2,000.00	100	2016	2016	3	97	1,940	
2	0855	CONC PAVER	0	0	0	0	216.00	SF	10.00	10.00	100	2016	2016	3	95	2,052	
3	0855	CONC PAVER	0	0	0	0	24.00	SF	10.00	10.00	100	2016	2016	3	95	228	
4	0476	VF 6 SBPL	0	0	0	0	36.00	LF	32.00	32.00	100	2016	2016	3	89	1,025	

LAND DESCRIPTION

TOTAL OB/XF 5,245

LN	USE CODE	CLS	LAND USE DESCRIPTION	CAP	RD	LOC ZONE	FRONT	DEPTH	TOT LND UTS	UNIT TYPE	DT	DPTH FACT	% COND	TOT ADJ	UNIT PRICE	ADJ UNIT PRICE	LAND VALUE	OTHER ADJUSTMENTS AND NOTES	YEAR	DENSITY	DECL	FRZ	YR	CONSRV
1	000100	C	RES	0		R-2	0.00	0.00	1.00	LT		1.00	1.00	1.00	275,000.00	275,000.00	275,000							

REVIEW DATE 01/14/2021 BY TWA Total Acres: 0.00 Total Land Value: 275,000 Market: 0 Agricultural: 0 Common: 275,000 PRINTED 07/30/2025 BY SYS