LOT 18
AMELIA OAKS PBK 8/85

DGT REVOCABLE TRUST/TYLER DAVID GLENDON TRUSTEE
1926 AMELIA OAKS DR
FERNANDINA BCH, FL 32034

2025

29-3N-28-0100-0018-0000

NASSAU COUNTY PROPERTY

BUILDING CHARACTERISTICS

ELEMENT	CD	CONSTRUCTION
Exterior Wall	10	ABOVE AVG 100
Roof Structur	08	IRREGULAR 100
Roof Cover	11	SLATE 100
Interior Wall	05	DRYWALL 100
Interior Floo	11	CLAY TILE 60
Interior Floo	14	CARPET 40
Air Condition	03	CENTRAL 100
Heating Type	04	AIR DUCTED 100
Bedrooms		3 100
Bathrooms		3.5 100
Frame	02	WOOD FRAME 100
Stories	2.	2. 100
Units		0 100
Occupancy	00	NONE 100
Quality	04	Quality Level 04
DOR CODE	0100	SINGLE FAMILY
MAP NUM		MKT AREA 01
NEIGHBORHOOD/LOC	2104.00	

AREA TYPE	TOTAL GROSS AREA	PCT OF BASE	YEAR	TOT ADJ AREA	SUBAREA MARKET VALUE
BAS	1,449	100	2017	1,449	310,538
FGR	264	55	2017	145	31,075
FOP	152	30	2017	46	9,858
FSP	190	40	2022	76	16,287
FST	210	55	2017	116	24,860
FUS	1,107	100	2017	1,107	237,244
STP	12	10	2017	1	214
STP	18	10	2017	2	429
STR	32	10	2017	3	643
TOTALS	3,434			2,945	631,148

MARKET ADJUSTMENTS

TYPE	MDL	EFF. AREA	TOT ADJ PTS	EFF. BASE RATE	REPL. COST NEW	AYB	EYB	ECON	FNCT		NORM	% COND
0500	01	2,945	127.1256	220.94	650,668	2017	2017	0	0	0	3.00	97.00

1 SFR CUST – 100% - 2025 Heated Area: 2556 HX Base Yr 2025

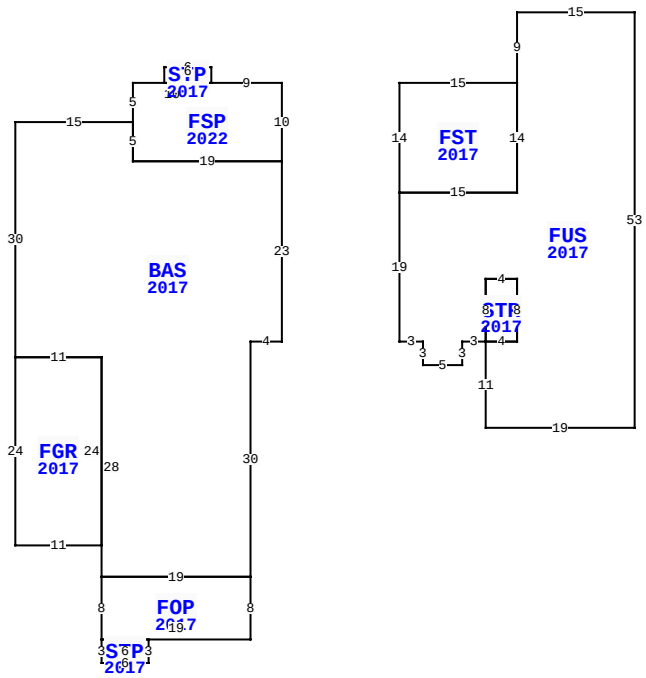

1926 AMELIA OAKS DR, FERNANDINA BEACH

BLD DATE		LGL DATE	
XF DATE		LAND DATE	04/02/2025 MLU
INC DATE		AG DATE	

VALUATION SUMMARY

VALUATION BY		STANDARD
Tax Group: 2	Tax Dist:	
BUILDING MARKET VALUE		631,148
TOTAL MARKET OB/XF VALUE		9,185
TOTAL LAND VALUE - MARKET		275,000
TOTAL MARKET VALUE		915,333
SOH/AGL Deduction		0
ASSESSED VALUE		915,333
TOTAL EXEMPTION VALUE	HX HB	50,722
BASE TAXABLE VALUE		864,611
TOTAL JUST VALUE		915,333
NCON VALUE		0
INCOME VALUE		
PREVIOUS YEAR MKT VALUE		857,894

PERMIT NUM	DESCRIPTION	AMT	ISSUED
20162307	CO ISSUED	0	11/28/2017
20162307	NEW CONSTR	295,836	08/22/2016

SALES DATA

OFF RECORD Number	DATE	TYPE INST	Q U	V I	RSN CD	SALE PRICE
2729/1904	6/28/2024	WD	U	I	11	100
GRANTOR: TYLER DAVID G						
GRANTEE: DGT REVOCABLE TRUST						
2580/1037	7/21/2022	WD	Q	I	01	1,075,000
GRANTOR: MOUNTJOY MATTHEW & JE						
GRANTEE: TYLER DAVID G						

BUILDING NOTES

BUILDING DIMENSIONS

FSP=[YR=2022] W9 STP=[YR=2017] N2 W6 S2 E6 $ W10 S5
BAS=[YR=2017] W15 S30 FGR=[YR=2017] S24 E11 N24 W11$ E11 S28
FOP=[YR=2017] S8 STP=[YR=2017] S3 E6 N3 W6$ E19 N8 W19$ E19
N30 E4 N23 W19 N5$ S5 E19 N10$ PTR= E15 FST=[YR=2017] E15
FUS=[YR=2017] N9 E15 S53 W19 N11 STR=[YR=2017] N8 E4 S8 W4$
E4 N8 W4 S8 W3 S3 W5 N3 W3 N19 E15 N14$ S14 W15 N14$ W15$.

EXTRA FEATURES

LN	OB/XF CODE	DESCRIPTION	BLD	CAP	L	W	UNITS	UT	Adj R	ADJ UNIT PRICE	ORIG COND	YEAR ON	YEAR ACTUAL	Q	% COND	OB/XF MKT VALUE	NOTES
1	0504	FP-ELECTRI	0	100	0	0	1.00	UT	2,000.00	2,000.00	100	2017	2017	3	97	1,940	
2	0855	CONC PAVER	0	100	0	0	335.00	SF	7.00	7.00	100	2017	2017	3	96	2,251	
3	0855	CONC PAVER	0	100	0	0	36.00	SF	7.00	7.00	100	2017	2017	3	96	242	
4	0855	CONC PAVER	0	100	0	0	480.00	SF	10.00	10.00	100	2022	2022	3	99	4,752	

LAND DESCRIPTION

TOTAL OB/XF 9,185

LN	USE CODE	CLS	LAND USE DESCRIPTION	CAP	RD	LOC ZONE	FRONT	DEPTH	TOT LND UTS	UNIT TYPE	DT	DPTH FACT	% COND	TOT ADJ	UNIT PRICE	ADJ UNIT PRICE	LAND VALUE	OTHER ADJUSTMENTS AND NOTES	YEAR	DENSITY	DECL	FRZ	YR	CONSRV
1	000100	C	RES	100		R-2	0.00	0.00	1.00	LT		1.00	1.00	1.00	275,000.00	275,000.00	275,000							

REVIEW DATE 06/03/2024 BY KBA Total Acres: 0.00 Total Land Value: 275,000 Market: 0 Agricultural: 0 Common: 275,000 PRINTED 07/30/2025 BY SYS