LOT 7
IN OR 2209/936
AMELIA OAKS PBK 8/85

LOUIS THOMAS W & KRISTEN J L/E/
1882 AMELIA OAKS DR
FERNANDINA BEACH, FL 32034

2025

29-3N-28-0100-0007-0000

NASSAU COUNTY PROPERTY

BUILDING CHARACTERISTICS

ELEMENT	CD	CONSTRUCTION
Exterior Wall	10	ABOVE AVG 100
Roof Structur	08	IRREGULAR 100
Roof Cover	12	MODULAR MT 100
Interior Wall	05	DRYWALL 100
Interior Floo	11	CLAY TILE 60
Interior Floo	14	CARPET 40
Air Condition	03	CENTRAL 100
Heating Type	04	AIR DUCTED 100
Bedrooms		3 100
Bathrooms		3.5 100
Frame	02	WOOD FRAME 100
Stories	2.	2. 100
Units		0 100
Occupancy	00	NONE 100
Quality	04	Quality Level 04

DOR CODE 0100 SINGLE FAMILY
MAP NUM | MKT AREA 01
NEIGHBORHOOD/LOC 2104.00

AREA TYPE	TOTAL GROSS AREA	PCT OF BASE	YEAR	TOT ADJ AREA	SUBAREA MARKET VALUE
BAS	1,449	100	2015	1,449	296,820
FGR	264	55	2015	145	29,702
FOP	150	30	2015	45	9,218
FOP	152	30	2015	46	9,422
FUS	1,003	100	2015	1,003	205,459
STP	10	10	2015	1	204
STP	24	10	2015	2	410
UST	136	45	2015	61	12,495
UST	210	45	2015	94	19,256
TOTALS	3,398			2,846	582,988

MARKET ADJUSTMENTS

TYPE	MDL	EFF. AREA	TOT ADJ PTS	EFF. BASE RATE	REPL. COST NEW	AYB	EYB	ECON	FNCT		NORM	% COND
0500	01	2,846	122.7744	213.38	607,279	2015	2015	0	0	0	4.00	96.00

1 SFR CUST – 100% - 2019 Heated Area: 2452 HX Base Yr 2019

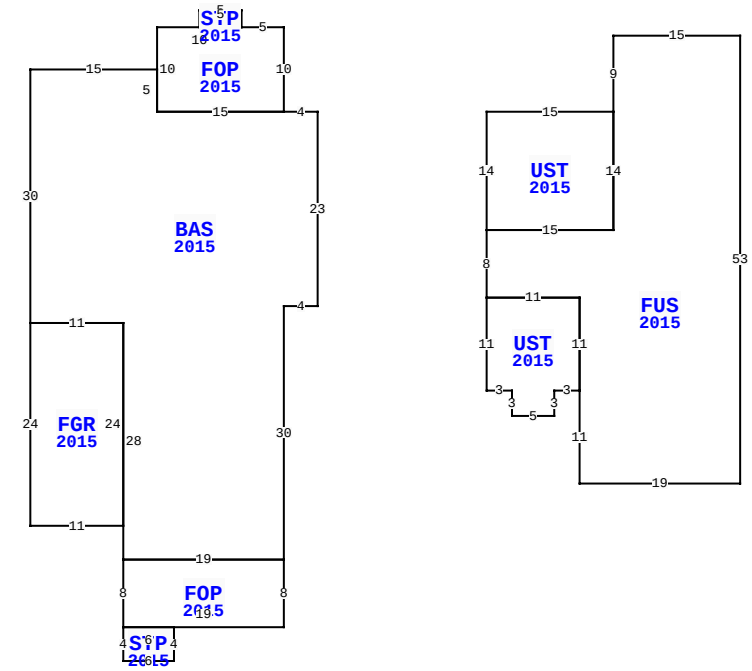

1882 AMELIA OAKS DR, FERNANDINA BEACH

BLD DATE		LGL DATE	
XF DATE		LAND DATE	04/02/2025 MLU
INC DATE		AG DATE	

VALUATION SUMMARY

VALUATION BY		STANDARD
Tax Group: 2	Tax Dist:	
BUILDING MARKET VALUE		582,988
TOTAL MARKET OB/XF VALUE		4,526
TOTAL LAND VALUE - MARKET		275,000
TOTAL MARKET VALUE		862,514
SOH/AGL Deduction		383,103
ASSESSED VALUE		479,411
TOTAL EXEMPTION VALUE	HX HB	50,722
BASE TAXABLE VALUE		428,689
TOTAL JUST VALUE		862,514
NCON VALUE		0
INCOME VALUE		
PREVIOUS YEAR MKT VALUE		835,923

PERMIT NUM	DESCRIPTION	AMT	ISSUED
20142238	CO ISSUED	0	07/16/2015
20142240	NEW CONSTR	313,255	10/16/2014

SALES DATA

OFF RECORD Number	DATE	TYPE INST	Q / U	V / I	RSN CD	SALE PRICE
2209/0936	1/16/2018	QC	U	I	11	100
GRANTOR: LOUIS THOMAS W & KRIS						
GRANTEE: LOUIS KRISTEN J & T						
2044/1359	5/05/2016	SW	Q	I	01	455,000
GRANTOR: D & H HOMES LLC						
GRANTEE: LOUIS THOMAS W & KR						

BUILDING NOTES

BUILDING DIMENSIONS

BAS=[YR=2015] W4 FOP=[YR=2015] N10 W5 STP=[YR=2015] N2 W5 S2 E5$ W10 S10 E15$ W15 N5 W15 S30 FGR=[YR=2015] S24 E11 N24 W11$ E11 S28 FOP=[YR=2015] S8 STP=[YR=2015] S4 E6 N4 W6 $ E19 N8 W19$ E19 N30 E4 N23$ PTR=E20 UST=[YR=2015] E15 FUS=[YR=2015] N9 E15 S53 W19 N11 UST=[YR=2015] W3 S3 W5 N3 W3 N11 E11 S11$ N11 W11 N8 E15 N14$ S14 W15 N14$ W20$.

EXTRA FEATURES

LN	OB/XF CODE	DESCRIPTION	BLD	CAP	L	W	UNITS	UT	Adj R	ADJ UNIT PRICE	ORIG COND	YEAR ON	YEAR ACTUAL	Q	% COND	OB/XF MKT VALUE	NOTES
1	0855	CONC PAVER	0	100	0	0	198.00	SF	10.00	10.00	100	2015	2015	3	95	1,881	
2	0855	CONC PAVER	0	100	0	0	21.00	SF	10.00	10.00	100	2015	2015	3	95	200	
3	0476	VF 6 SBPL	0	100	0	0	12.00	LF	32.00	32.00	100	2015	2015	3	87	334	
4	0479	VF PICKET	0	100	0	0	22.00	LF	10.00	10.00	100	2015	2015	3	87	191	
5	0504	FP-ELECTRI	0	100	0	0	1.00	UT	2,000.00	2,000.00	100	2015	2015	3	96	1,920	

LAND DESCRIPTION

TOTAL OB/XF 4,526

LN	USE CODE	CLS	LAND USE DESCRIPTION	CAP	RD	LOC ZONE	FRONT	DEPTH	TOT LND UTS	UNIT TYPE	DT	DPTH FACT	% COND	TOT ADJ	UNIT PRICE	ADJ UNIT PRICE	LAND VALUE	OTHER ADJUSTMENTS AND NOTES	YEAR	DENSITY	DECL	FRZ	YR	CONSRV
1	000100	C	RES	100		R-2	0.00	0.00	1.00	LT		1.00	1.00	1.00	275,000.00	275,000.00	275,000							

REVIEW DATE 01/14/2021 BY TWA Total Acres: 0.00 Total Land Value: 275,000 Market: 0 Agricultural: 0 Common: 275,000 PRINTED 07/30/2025 BY SYS