LOT 1
AMELIA OAKS PBK 8/85

ZDONEK MICHAEL W & DEBORAH L
1860 AMELIA OAKS DR
FERNANDINA BEACH, FL 32034

2025

29-3N-28-0100-0001-0000

NASSAU COUNTY PROPERTY

BUILDING CHARACTERISTICS

ELEMENT	CD	CONSTRUCTION
Exterior Wall	10	ABOVE AVG 100
Roof Structur	04	WOOD TRUSS 100
Roof Cover	11	SLATE 100
Interior Wall	05	DRYWALL 100
Interior Floo	11	CLAY TILE 60
Interior Floo	14	CARPET 40
Air Condition	03	CENTRAL 100
Heating Type	04	AIR DUCTED 100
Bedrooms		3 100
Bathrooms		3 100
Frame	02	WOOD FRAME 100
Stories	2.	2. 100
Units		0 100
Occupancy	00	NONE 100
Quality	04	Quality Level 04
DOR CODE	0100	SINGLE FAMILY
MAP NUM		MKT AREA 01
NEIGHBORHOOD/LOC	2104.00	

AREA TYPE	TOTAL GROSS AREA	PCT OF BASE	YEAR	TOT ADJ AREA	SUBAREA MARKET VALUE
BAS	1,427	100	2016	1,427	279,997
FGR	390	55	2016	214	41,990
FOP	152	30	2016	46	9,026
FOP	152	30	2016	46	9,026
FOP	210	30	2016	63	12,362
FSP	280	40	2016	112	21,976
FUS	1,723	100	2016	1,723	338,076
STP	18	10	2016	2	393
STP	42	10	2016	4	785
STR	32	10	2016	3	589
TOTALS	4,426			3,640	714,217

MARKET ADJUSTMENTS

TYPE	MDL	EFF. AREA	TOT ADJ PTS	EFF. BASE RATE	REPL. COST NEW	AYB	EYB	ECON	FNCT		NORM	% COND
0500	01	3,640	116.9910	203.33	740,121	2016	2016	0	0	0	3.50	96.50

1 SFR CUST – 100% - 2024 Heated Area: 3150 HX Base Yr 2024

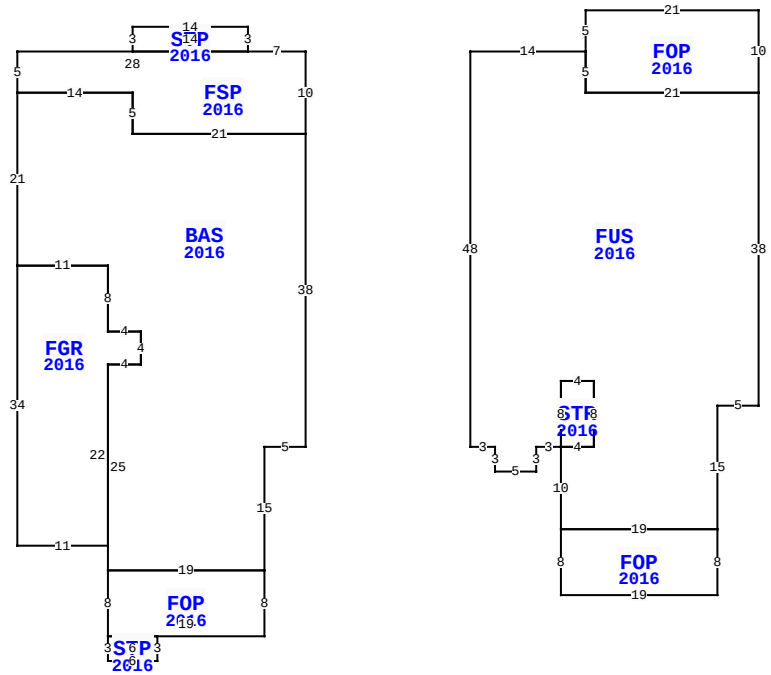

BLD DATE		LGL DATE	
XF DATE		LAND DATE	04/02/2025 MLU
INC DATE		AG DATE	

1860 AMELIA OAKS DR, FERNANDINA BEACH

VALUATION SUMMARY

VALUATION BY		STANDARD
Tax Group: 2	Tax Dist:	
BUILDING MARKET VALUE		714,217
TOTAL MARKET OB/XF VALUE		24,206
TOTAL LAND VALUE - MARKET		275,000
TOTAL MARKET VALUE		1,013,423
SOH/AGL Deduction		4,109
ASSESSED VALUE		1,009,314
TOTAL EXEMPTION VALUE	HX HB	50,722
BASE TAXABLE VALUE		958,592
TOTAL JUST VALUE		1,013,423
NCON VALUE		0
INCOME VALUE		
PREVIOUS YEAR MKT VALUE		980,869

PERMIT NUM	DESCRIPTION	AMT	ISSUED
20152212	CO ISSUED	0	06/16/2016
20152212	NEW CONSTR	378,765	09/02/2015

SALES DATA

OFF RECORD Number	DATE	TYPE INST	Q / U	V / I	RSN CD	SALE PRICE
2649/898	6/22/2023	WD	Q	I	01	1,150,000
GRANTOR: WILSON EDWARD E & MAR						
GRANTEE: ZDONEK MICHAEL W &						
2470/0807	6/14/2021	PR	U	I	19	100
GRANTOR: WOLFF AMY E & MICHELE						
GRANTEE: WILSON EDWARD E & M						

BUILDING NOTES

BUILDING DIMENSIONS

FUS=[YR=2016;ORIG=20,0] E14 S5 E21 S38 W5 S15 W19 N10 E4 N8 W4 S8 W3 S3 W5 N3 W3 N48 $
BAS=[YR=2016;ORIG=-35,5] S21 E11 S8 E4 S4 W4 S25 E19 N15 E5 N38 W21 N5 W14 $
FGR=[YR=2016;ORIG=-35,26] S34 E11 N22 E4 N4 W4 N8 W11 $
FSP=[YR=2016;ORIG=0,0] W7 W28 S5 E14 S5 E21 N10 $
FOP=[YR=2016;ORIG=34,0] N5 E21 S10 W21 N5 $
FOP=[YR=2016;ORIG=-24,63] S8 E19 N8 W19 $
FOP=[YR=2016;ORIG=50,58] S8 W19 N8 E19 $
STP=[YR=2016;ORIG=-7,0] N3 W14 S3 E14 $
STR=[YR=2016;ORIG=31,48] N8 E4 S8 W4 $
STP=[YR=2016;ORIG=-24,71] S3 E6 N3 W6 $

EXTRA FEATURES

LN	OB/XF CODE	DESCRIPTION	BLD	CAP	L	W	UNITS	UT	Adj R	ADJ UNIT PRICE	ORIG COND	YEAR ON	YEAR ACTUAL	Q	% COND	OB/XF MKT VALUE	NOTES
1	0504	FP-ELECTRI	0	100	0	0	1.00	UT	2,000.00	2,000.00	100	2016	2016	3	97	1,940	
2	0855	CONC PAVER	0	100	0	0	270.00	SF	10.00	10.00	100	2016	2016	3	95	2,565	
3	0855	CONC PAVER	0	100	0	0	21.00	SF	10.00	10.00	100	2016	2016	3	95	200	
4	0855	CONC PAVER	0	100	0	0	304.00	SF	10.00	10.00	100	2016	2016	3	95	2,888	
5	0479	VF PICKET	0	100	0	0	132.00	LF	10.00	10.00	100	2016	2016	3	89	1,175	
6	0476	VF 6 SBPL	0	100	0	0	6.00	LF	32.00	32.00	100	2016	2016	3	89	171	
7	0470	VNYL GATE	0	100	0	0	1.00	UT	300.00	300.00	100	2016	2016	3	89	267	
8	0410	ELEVATOR	0	100	0	0	1.00	UT	15,000.00	15,000.00	100	2016	2016	3	100	15,000	

LAND DESCRIPTION

TOTAL OB/XF 24,206

LN	USE CODE	CLS	LAND USE DESCRIPTION	CAP	RD	LOC ZONE	FRONT	DEPTH	TOT LND UTS	UNIT TYPE	DT	DPTH FACT	% COND	TOT ADJ	UNIT PRICE	ADJ UNIT PRICE	LAND VALUE	OTHER ADJUSTMENTS AND NOTES	YEAR	DENSITY	DECL	FRZ	YR	CONSRV
1	000100	C	RES	100		R-2	0.00	0.00	1.00	LT		1.00	1.00	1.00	275,000.00	275,000.00	275,000							

REVIEW DATE 01/14/2021 BY TWA Total Acres: 0.00 Total Land Value: 275,000 Market: 0 Agricultural: 0 Common: 275,000 PRINTED 07/30/2025 BY SYS