PT OF GOV'T LOT 5
OR 1548/1576
FOOD LION LEASED PROPERTY

SADLER SQUARE LAND TRUST/PROPERTY MANAGEMENT SUPPO
1 SLEIMAN PARKWAY STE #270
JACKSONVILLE, FL 32216

2025

29-3N-28-0000-0004-0080

NASSAU COUNTY PROPERTY

BUILDING CHARACTERISTICS

ELEMENT	CD	CONSTRUCTION
Exterior Wall	15	CONC BLOCK 70
Exterior Wall	17	CB STUCCO 30
Roof Structur	09	RIDGE FRME 100
Roof Cover	04	BUILT-UP 100
Interior Wall	05	DRYWALL 100
Interior Floo	03	CONC FINSH 70
Interior Floo	11	CLAY TILE 30
Ceiling	01	FIN.SUSPD 100
Air Condition	04	ROOF TOP 100
Heating Type	04	AIR DUCTED 100
Fixtures		19 100
Frame	03	MASONRY 100
Story Height		14 100
RMS		8 100
Stories	1.	1. 100
Units		0 100
BUD8 Adjustme	02	DIST FB 100
Occupancy	00	NONE 100
Quality	03	Quality Level 03
DOR CODE	1600	COMMUNITY SHOPPING
MAP NUM		MKT AREA 01
NEIGHBORHOOD/LOC	2004.00	

AREA TYPE	TOTAL GROSS AREA	PCT OF BASE	YEAR	TOT ADJ AREA	SUBAREA MARKET VALUE
BAS	1,200	100	1993	1,200	26,508
BAS	1,560	100	1993	1,560	34,460
BAS	6,915	100	1993	6,915	152,752
BAS	1,765	100	1994	1,765	38,989
CAN	1,350	30	1993	405	8,946
TOTALS	12,790			11,845	261,656

MARKET ADJUSTMENTS

TYPE	MDL	EFF. AREA	TOT ADJ PTS	EFF. BASE RATE	REPL. COST NEW	AYB	EYB	ECON	FNCT	AP	NORM	% COND
1601	04	11,845	99.5043	110.45	1,308,280	1987	1987	0	0	30	50.00	20.00

1 COMNTYSHOP – 0% - 0 Heated Area: 11440 HX Base Yr

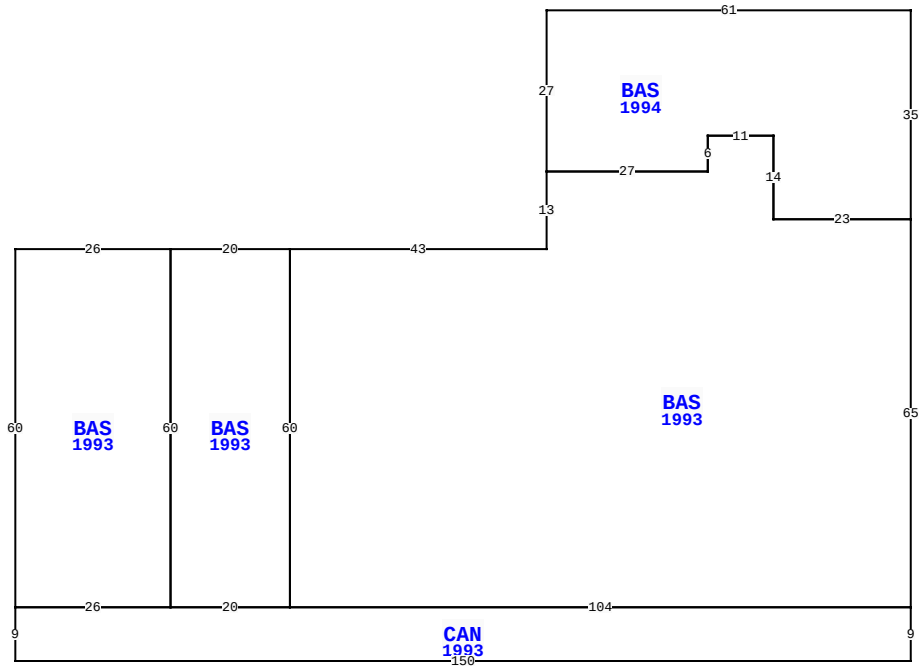

2100 SADLER SQ, FERNANDINA BEACH

BLD DATE	04/04/2025	KW	LGL DATE		
XF DATE	04/04/2025	KW	LAND DATE	06/30/2021	KK
INC DATE	07/18/2025	REA	AG DATE		

VALUATION SUMMARY

VALUATION BY	DIRECT_CAP
Tax Group: 2	Tax Dist:
BUILDING MARKET VALUE	4,721,876
TOTAL MARKET OB/XF VALUE	0
TOTAL LAND VALUE - MARKET	0
TOTAL MARKET VALUE	4,721,876
SOH/AGL Deduction	0
ASSESSED VALUE	4,721,876
TOTAL EXEMPTION VALUE	0
BASE TAXABLE VALUE	4,721,876
TOTAL JUST VALUE	4,721,876
NCON VALUE	0
INCOME VALUE	4,721,876
PREVIOUS YEAR MKT VALUE	4,827,231

PERMIT NUM	DESCRIPTION	AMT	ISSUED
20200136	REMODEL-2134 SADL	8,000	12/16/2020
20180486	REMODEL-LOTTS FUR	500,000	02/12/2018
20180455	REPAIR/RRF	28,000	02/08/2018
20180313	REPAIR/RRF	293,750	01/26/2018
20173379	REMODEL	364,300	10/30/2017
20173380	REMODEL-INT BLD O	556,500	10/30/2017

SALES DATA

OFF RECORD Number	DATE	TYPE INST	Q U /	V I /	RSN CD	SALE PRICE
1548/1576	1/31/2008	WD	Q	I	02	100
GRANTOR: SOUTHEASTERN PROPERTY						
GRANTEE: PROPERTY MANAGEMENT						
1548/1576	1/31/2008	WD	Q	I	02	100
GRANTOR: SOUTHEASTERN PROPERTY						
GRANTEE: PROPERTY MANAGEMENT						

BUILDING NOTES

EXTRA FEATURES

LN	OB/XF CODE	DESCRIPTION	BLD	CAP	L	W	UNITS	UT	Adj R	ADJ UNIT PRICE	ORIG COND	YEAR ON	YEAR ACTUAL	Q	% COND	OB/XF MKT VALUE	NOTES
1	0811	CONCRETE B	0	0	0	0	706.00	SF	5.20	5.20	1	1987	1987	3	1	37	
2	0811	CONCRETE B	0	0	0	0	550.00	SF	5.20	5.20	1	1987	1987	3	1	29	
3	0803	ASPHALT C	0	0	0	0	254,167.00	SF	2.00	2.00	1	1987	1987	3	1	5,083	
4	0972	ST LGHT UN	0	0	0	0	21.00	UT	2,530.00	2,530.00	1	1987	1987	3	1	531	
5	0400	CONC CURB	0	0	0	0	4,526.00	LF	15.00	15.00	1	1987	1987	3	1	679	
6	4950	BOLLARD	0	0	0	0	9.00	UT	100.00	100.00	1	1987	1987	3	1	9	
7	0418	EXHST FAN	0	0	0	0	2.00	UT	400.00	400.00	1	1987	1987	3	1	8	
8	0966	FIRE SPRNK	1	0	0	0	11,440.00	SF	3.00	3.00	1	1987	1987	3	1	343	
9	0430	CL FNC 6B	0	0	0	0	51.00	LF	9.70	9.70	1	1990	1990	3	1	5	
10	0819	CONC 12"	0	0	0	0	221.00	SF	9.50	9.50	1	1990	1990	3	1	21	

TOTAL OB/XF 6,745

BUILDING DIMENSIONS

```
BAS=[YR=1993;LABEL=unit:2100;ORIG=-61,27] S13 W43 S60 E104
N65 W23 N14 W11 S6 W27 $
BAS=[YR=1994;ORIG=0,0] W61 S27 E27 N6 E11 S14 E23 N35 $
BAS=[YR=1993;LABEL=unit:2108;ORIG=-124,40] W26 S60 E26 N60 $
CAN=[YR=1993;ORIG=-150,100] S9 E150 N9 W104 W20 W26 $
BAS=[YR=1993;LABEL=unit:2106;ORIG=-104,40] W20 S60 E20 N60 $
.
```

LAND DESCRIPTION

LN	USE CODE	CLS	LAND USE DESCRIPTION	CAP	RD	LOC ZONE	FRONT	DEPTH	TOT LND UTS	UNIT TYPE	DT	DPTH FACT	% COND	TOT ADJ	UNIT PRICE	ADJ UNIT PRICE	LAND VALUE	OTHER ADJUSTMENTS AND NOTES	YEAR	DENSITY	DECL	FRZ	YR	CONSRV
1	001600	C	SH CTR COM	0	0003	C-2	0.00	0.00	541,886.00	SF		1.00	1.00	0.95	7.50	7.13	3,860,938							

REVIEW DATE 04/04/2025 BY KW Total Acres: 12.44 Total Land Value: 0 Market: 0 Agricultural: 0 Common: 0 PRINTED 07/30/2025 BY SYS

PT OF GOV'T LOT 5
OR 1548/1576
FOOD LION LEASED PROPERTY

SADLER SQUARE LAND TRUST/PROPERTY MANAGEMENT SUPPO
1 SLEIMAN PARKWAY STE #270
JACKSONVILLE, FL 32216

2025

29-3N-28-0000-0004-0080

NASSAU COUNTY PROPERTY

BUILDING CHARACTERISTICS

ELEMENT	CD	CONSTRUCTION
Exterior Wall	15	CONC BLOCK 80
Exterior Wall	28	GLASS THRM 20
Roof Structur	09	RIDGE FRME 100
Roof Cover	04	BUILT-UP 100
Interior Wall	05	DRYWALL 100
Interior Floo	14	CARPET 60
Interior Floo	11	CLAY TILE 40
Ceiling	04	NONE 100
Air Condition	04	ROOF TOP 100
Heating Type	04	AIR DUCTED 100
Fixtures		6 100
Frame	03	MASONRY 100
Story Height		15 100
RMS		10 100
Stories	1.	1. 100
Units		0 100
BUD8 Adjustme	02	DIST FB 100
Occupancy	00	NONE 100
Quality	05	Quality Level 05

DOR CODE	1600	COMMUNITY SHOPPING	
MAP NUM		MKT AREA	01
NEIGHBORHOOD/LOC	2004.00		

AREA TYPE	TOTAL GROSS AREA	PCT OF BASE	YEAR	TOT ADJ AREA	SUBAREA MARKET VALUE
AOF	256	100	1994	256	7,293
BAS	27,917	100	1994	27,917	795,299
CAN	76	30	1993	23	655
CAN	40	30	1994	12	342
CAN	2,310	30	1994	693	19,742
FST	128	50	1994	64	1,823
FST	1,056	50	1994	528	15,042
SFB	270	80	1994	216	6,153
SFB	2,119	80	1994	1,695	48,287
TOTALS	34,172			31,404	894,637

MARKET ADJUSTMENTS

TYPE	MDL	EFF. AREA	TOT ADJ PTS	EFF. BASE RATE	REPL. COST NEW	AYB	EYB	ECON	FNCT	AP	NORM	% COND
1601	04	31,404	128.3230	142.44	4,473,186	1987	1997	0	0	30	50.00	20.00

2 COMNTYSHOP - 0% - 0 Heated Area: 30084 HX Base Yr

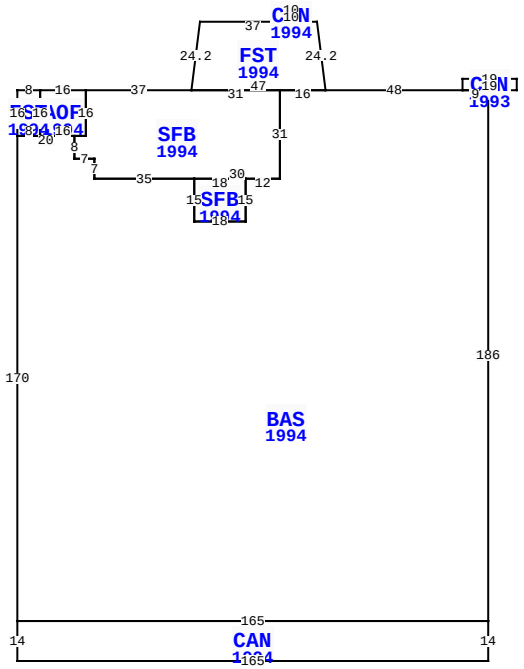

2100 SADLER SQ, FERNANDINA BEACH

BLD DATE	04/04/2025	KW	LGL DATE		
XF DATE	04/04/2025	KW	LAND DATE	06/30/2021	KK
INC DATE	07/18/2025	REA	AG DATE		

EXTRA FEATURES

LN	OB/XF CODE	DESCRIPTION	BLD	CAP	L	W	UNITS	UT	Adj R	ADJ UNIT PRICE	ORIG COND	YEAR ON	YEAR ACTUAL	Q	% COND	OB/XF MKT VALUE	NOTES
11	0819	CONC 12"	0	0	0	0	93.00	SF	9.50	9.50	1	2009	2009	3	1	9	
12	0810	CONCRETE A	0	0	0	0	43.00	SF	6.50	6.50	1	2001	2001	3	1	3	
14	4950	BOLLARD	0	0	0	0	28.00	UT	100.00	100.00	1	1987	1987	3	1	28	
15	0964	HALON SYST	0	0	10	3	30.00	SF	50.00	50.00	1	1995	1995	3	1	15	
16	0975	ST LT/ARM	0	0	0	0	15.00	UT	500.00	500.00	1	1987	1987	3	1	75	
19	0402	CONC BUMPE	0	0	0	0	1.00	UT	25.00	25.00	1	1987	1987	3	1	0	
20	0812	CONCRETE C	0	0	0	0	2,845.00	SF	4.00	4.00	1	2007	2007	3	1	114	
21	0803	ASPHALT C	0	0	0	0	10,880.00	SF	2.00	2.00	1	2007	2007	3	1	218	
22	0400	CONC CURB	0	0	0	0	1,225.00	LF	15.00	15.00	1	2007	2007	3	1	184	
23	0855	CONC PAVER	0	0	0	0	371.00	SF	10.00	10.00	1	2007	2007	3	1	37	

TOTAL OB/XF 683

VALUATION SUMMARY

VALUATION BY	DIRECT_CAP
Tax Group: 2	Tax Dist:
BUILDING MARKET VALUE	4,721,876
TOTAL MARKET OB/XF VALUE	0
TOTAL LAND VALUE - MARKET	0
TOTAL MARKET VALUE	4,721,876
SOH/AGL Deduction	0
ASSESSED VALUE	4,721,876
TOTAL EXEMPTION VALUE	0
BASE TAXABLE VALUE	4,721,876
TOTAL JUST VALUE	4,721,876
NCON VALUE	0
INCOME VALUE	4,721,876
PREVIOUS YEAR MKT VALUE	4,827,231

PERMIT NUM	DESCRIPTION	AMT	ISSUED
20162890	REMDL-UF JAX PHYS	282,144	10/25/2016
20162726	REMDL-PINBALL MUS	2,000	10/04/2016
20141792	FIRE SPRNK	2,400	08/14/2014
D0141619	H/AC	5,976	07/24/2014
20130756	H/AC	1,200	04/10/2013
20130757	REMODEL	1,800	04/10/2013

SALES DATA

OFF RECORD Number	DATE	TYPE INST	Q / U	V / I	RSN CD	SALE PRICE
1548/1576	1/31/2008	WD	Q	I	02	100

GRANTOR: SOUTHEASTERN PROPERTY
GRANTEE: PROPERTY MANAGEMENT

1548/1576	1/31/2008	WD	Q	I	02	100

GRANTOR: SOUTHEASTERN PROPERTY
GRANTEE: PROPERTY MANAGEMENT

BUILDING NOTES

BUILDING DIMENSIONS

CAN=[YR=1993] W19 S4 BAS=[YR=1994] W48 FST=[YR=1994] U24 L3 W4 CAN=[YR=1994] N4 W10 S4 E10$ W37 D24 L3 SFB=[YR=1994] W37 AOF=[YR=1994] W16 FST=[YR=1994] W8 S16 E8 N16$ S16 E16 N16$ S16 W4 S8 E7 S7 E35 SFB=[YR=1994] S15 E18 N15 W18$ E30 N31 W31$ E47$ W16 S31 W12 S15 W18 N15 W35 N7 W7 N8 W20 S170 CAN=[YR=1994] S14 E165 N14 W165$ E165 N186 W9$ E19 N4$.

LAND DESCRIPTION

LN	USE CODE	CLS	LAND USE DESCRIPTION	CAP	RD	LOC ZONE	FRONT	DEPTH	TOT LND UTS	UNIT TYPE	DT	DPTH FACT	% COND	TOT ADJ	UNIT PRICE	ADJ UNIT PRICE	LAND VALUE	OTHER ADJUSTMENTS AND NOTES	YEAR	DENSITY	DECL	FRZ	YR	CONSRV

REVIEW DATE 04/04/2025 BY KW Total Acres: 12.44 Total Land Value: 0 Market: 0 Agricultural: 0 Common: 0 PRINTED 07/30/2025 BY SYS

PT OF GOV'T LOT 5
OR 1548/1576
FOOD LION LEASED PROPERTY

SADLER SQUARE LAND TRUST/PROPERTY MANAGEMENT SUPPO
1 SLEIMAN PARKWAY STE #270
JACKSONVILLE, FL 32216

2025

29-3N-28-0000-0004-0080

NASSAU COUNTY PROPERTY

BUILDING CHARACTERISTICS

ELEMENT	CD	CONSTRUCTION
Exterior Wall	15	CONC BLOCK 100
Roof Structur	09	RIDGE FRME 100
Roof Cover	04	BUILT-UP 100
Interior Wall	05	DRYWALL 100
Interior Floo	05	ASPH TILE 70
Interior Floo	03	CONC FINSH 30
Ceiling	01	FIN.SUSPD 100
Air Condition	04	ROOF TOP 100
Heating Type	04	AIR DUCTED 100
Fixtures		85 100
Frame	03	MASONRY 100
Story Height		14 100
RMS		47 100
Stories	1.	1. 100
Units		0 100
BUD8 Adjustme	02	DIST FB 100
Occupancy	00	NONE 100
Quality	03	Quality Level 03
DOR CODE	1600	COMMUNITY SHOPPING
MAP NUM		MKT AREA 01
NEIGHBORHOOD/LOC	2004.00	

AREA TYPE	TOTAL GROSS AREA	PCT OF BASE	YEAR	TOT ADJ AREA	SUBAREA MARKET VALUE
BAS	1,400	100	1993	1,400	29,669
BAS	924	100	1994	924	19,581
BAS	1,176	100	1994	1,176	24,922
BAS	1,218	100	1994	1,218	25,812
BAS	1,600	100	1994	1,600	33,907
BAS	1,776	100	1994	1,776	37,637
BAS	1,824	100	1994	1,824	38,654
BAS	3,200	100	1994	3,200	67,814
BAS	3,200	100	1994	3,200	67,814
BAS	3,420	100	1994	3,420	72,477
TOTALS	32,964			30,138	638,684

MARKET ADJUSTMENTS

TYPE	MDL	EFF. AREA	TOT ADJ PTS	EFF. BASE RATE	REPL. COST NEW	AYB	EYB	ECON	FNCT	AP	NORM	% COND
1601	04	30,138	95.4608	105.96	3,193,422	1987	1987	0	0	300	50.00	20.00

3 COMNTYSHOP - 0% - 0 Heated Area: 28644 HX Base Yr

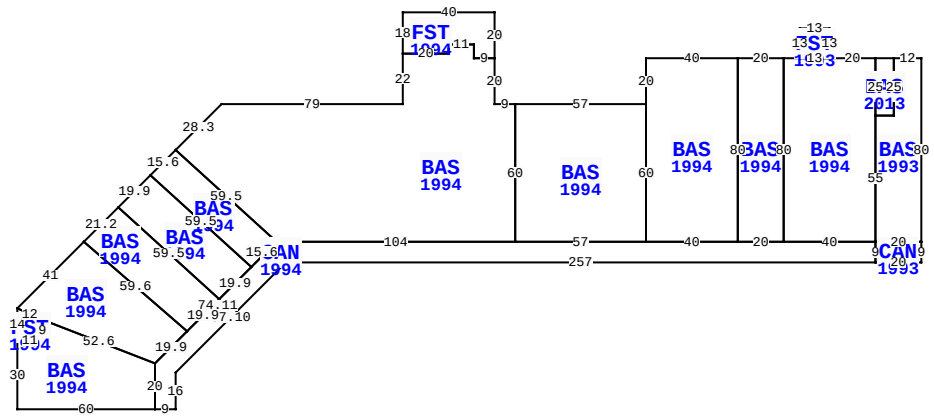

** This building has 17 Sub-Areas

2100 SADLER SQ, FERNANDINA BEACH

BLD DATE	04/04/2025	KW	LGL DATE	
XF DATE	04/04/2025	KW	LAND DATE	06/30/2021 KK
INC DATE	07/18/2025	REA	AG DATE	

VALUATION SUMMARY

VALUATION BY	DIRECT_CAP
Tax Group: 2	Tax Dist:
BUILDING MARKET VALUE	4,721,876
TOTAL MARKET OB/XF VALUE	0
TOTAL LAND VALUE - MARKET	0
TOTAL MARKET VALUE	4,721,876
SOH/AGL Deduction	0
ASSESSED VALUE	4,721,876
TOTAL EXEMPTION VALUE	0
BASE TAXABLE VALUE	4,721,876
TOTAL JUST VALUE	4,721,876
NCON VALUE	0
INCOME VALUE	4,721,876
PREVIOUS YEAR MKT VALUE	4,827,231

PERMIT NUM	DESCRIPTION	AMT	ISSUED
20130156	REPAIR/RRF	2,400	01/22/2013
20130119	OTHER	500	01/16/2013
20130034	GAS	500	01/07/2013
20130041	ELEC OTHER	1,000	01/07/2013
20121963	GAS	0	09/24/2012
20111818	SIGN	0	10/10/2011

SALES DATA

OFF RECORD Number	DATE	TYPE INST	Q / U	V / I	RSN CD	SALE PRICE
1548/1576	1/31/2008	WD	Q	I	02	100
GRANTOR: SOUTHEASTERN PROPERTY						
GRANTEE: PROPERTY MANAGEMENT						
1548/1576	1/31/2008	WD	Q	I	02	100
GRANTOR: SOUTHEASTERN PROPERTY						
GRANTEE: PROPERTY MANAGEMENT						

BUILDING NOTES

EXTRA FEATURES

LN	OB/XF CODE	DESCRIPTION	BLD	CAP	L	W	UNITS	UT	Adj R	ADJ UNIT PRICE	ORIG COND	YEAR ON	YEAR ACTUAL	Q	% COND	OB/XF MKT VALUE	NOTES
24	0810	CONCRETE A	0	0	0	0	117.00	SF	6.50	6.50	1	2007	2007	3	1	8	
25	1123	CB 8"	0	0	27	0	1,225.00	SF	6.15	6.15	1	2007	2007	3	1	75	
26	0972	ST LGHT UN	0	0	0	0	2.00	UT	2,530.00	2,530.00	1	2007	2007	3	1	51	
27	0975	ST LT/ARM	0	0	0	0	2.00	UT	500.00	500.00	1	2007	2007	3	1	10	
28	0097	AWNING CN	0	0	0	0	120.00	SF	65.00	65.00	1	2007	2007	3	1	78	
29	0803	ASPHALT C	0	0	0	0	6,534.00	SF	2.00	2.00	1	2007	2007	3	1	131	
30	0803	ASPHALT C	0	0	0	0	2,430.00	SF	2.00	2.00	1	2007	2007	3	1	49	
31	0803	ASPHALT C	0	0	0	0	5,367.00	SF	2.00	2.00	1	2007	2007	3	1	107	
32	1123	CB 8"	0	0	53	0	318.00	SF	6.15	6.15	1	2007	2007	3	1	20	
33	0810	CONCRETE A	0	0	32	11	352.00	SF	6.50	6.50	1	2007	2007	3	1	23	

TOTAL OB/XF 552

BUILDING DIMENSIONS

BAS=[YR=1994;LABEL=unit:2126;ORIG=-177,22] W9 N20 W9 N6 W11 S4 W20 S22 W79 D20L20 D40R44 E104 N60 $
BAS=[YR=1994;LABEL=unit:2122;ORIG=-177,22] E57 S60 W57 N60 $
BAS=[YR=1994;LABEL=unit:2118;ORIG=-120,2] E40 S80 W40 N60 N20 $
BAS=[YR=1994;LABEL=unit:2112;ORIG=-60,2] E7 E13 E20 S25 S55 W40 N80 $
CAN=[YR=1994;ORIG=-334,155] E9 N16 U48R48 E257 N9 W40 W20 W40 W57 W104 D53L53 S20 $
BAS=[YR=1994;LABEL=unit: 2136;ORIG=-365,82] D39R45 D14L14 U19L49 U5L11 U29R29 $
BAS=[YR=1994;LABEL=unit:2116;ORIG=-80,2] E20 S80 W20 N80 $

LAND DESCRIPTION

LN	USE CODE	CLS	LAND USE DESCRIPTION	CAP	RD	LOC ZONE	FRONT	DEPTH	TOT LND UTS	UNIT TYPE	DT	DPTH FACT	% COND	TOT ADJ	UNIT PRICE	ADJ UNIT PRICE	LAND VALUE	OTHER ADJUSTMENTS AND NOTES	YEAR	DENSITY	DECL	FRZ	YR	CONSRV

REVIEW DATE 04/04/2025 BY KW Total Acres: 12.44 Total Land Value: 0 Market: 0 Agricultural: 0 Common: 0 PRINTED 07/30/2025 BY SYS

PT OF GOV'T LOT 5
OR 1548/1576
FOOD LION LEASED PROPERTY

SADLER SQUARE LAND TRUST/PROPERTY MANAGEMENT SUPPO
1 SLEIMAN PARKWAY STE #270
JACKSONVILLE, FL 32216

2025

29-3N-28-0000-0004-0080

NASSAU COUNTY PROPERTY

BUILDING CHARACTERISTICS

ELEMENT	CD	CONSTRUCTION
Exterior Wall	17	CB STUCCO 70
Exterior Wall	28	GLASS THRM 30
Roof Structur	09	RIDGE FRME 100
Roof Cover	04	BUILT-UP 100
Interior Wall	05	DRYWALL 100
Interior Floo	03	CONC FINSH 100
Ceiling	04	NONE 100
Air Condition	04	ROOF TOP 100
Heating Type	04	AIR DUCTED 100
Fixtures		8 100
Frame	03	MASONRY 100
Story Height		14 100
RMS		4 100
Stories	1.	1. 100
Units		0 100
Occupancy	00	NONE 100
Quality	03	Quality Level 03
DOR CODE	1600	COMMUNITY SHOPPING
MAP NUM		MKT AREA 01
NEIGHBORHOOD/LOC	2004.00	

AREA TYPE	TOTAL GROSS AREA	PCT OF BASE	YEAR	TOT ADJ AREA	SUBAREA MARKET VALUE
BAS	14,342	100	2007	14,342	1,070,917
UST	32	40	2007	13	971
TOTALS	14,374			14,355	1,071,888

MARKET ADJUSTMENTS

TYPE	MDL	EFF. AREA	TOT ADJ PTS	EFF. BASE RATE	REPL. COST NEW	AYB	EYB	ECON	FNCT	AP	NORM	% COND
1101	04	14,355	93.9057	131.00	1,880,505	2007	2007	0	0	30	13.00	57.00

4 RETAILSTOR – 0% - 0 Heated Area: 14342 HX Base Yr

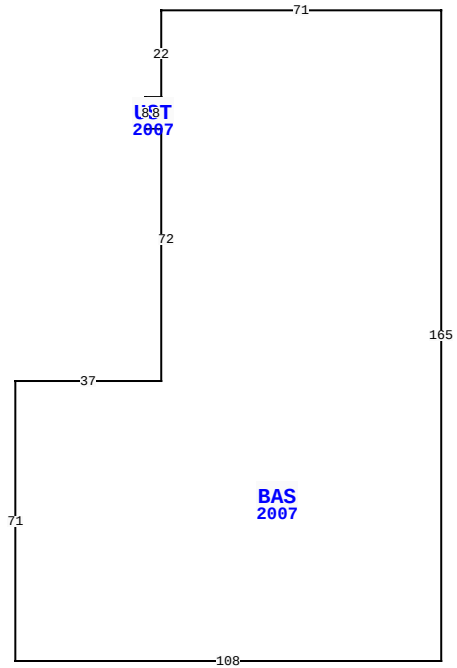

2100 SADLER SQ, FERNANDINA BEACH

BLD DATE	04/04/2025	KW	LGL DATE		
XF DATE	04/04/2025	KW	LAND DATE	06/30/2021	KK
INC DATE	07/18/2025	REA	AG DATE		

NASSAU COUNTY PROPERTY — VALUATION SUMMARY

VALUATION BY	DIRECT_CAP
Tax Group: 2	Tax Dist:
BUILDING MARKET VALUE	4,721,876
TOTAL MARKET OB/XF VALUE	0
TOTAL LAND VALUE - MARKET	0
TOTAL MARKET VALUE	4,721,876
SOH/AGL Deduction	0
ASSESSED VALUE	4,721,876
TOTAL EXEMPTION VALUE	0
BASE TAXABLE VALUE	4,721,876
TOTAL JUST VALUE	4,721,876
NCON VALUE	0
INCOME VALUE	4,721,876
PREVIOUS YEAR MKT VALUE	4,827,231

PERMIT NUM	DESCRIPTION	AMT	ISSUED
20111842	FIRE SUPP SYS	2,000	10/10/2011
20111798	SIGN	0	10/07/2011
20111668	SIGN	0	09/22/2011
20111339	H/AC	2,000	08/10/2011
20111340	ELEC OTHER	300	08/10/2011
20110745	SIGN	1,600	05/16/2011

SALES DATA

OFF RECORD Number	DATE	TYPE INST	Q / U	V / I	RSN CD	SALE PRICE
1548/1576	1/31/2008	WD	Q	I	02	100

GRANTOR: SOUTHEASTERN PROPERTY
GRANTEE: PROPERTY MANAGEMENT

1548/1576	1/31/2008	WD	Q	I	02	100

GRANTOR: SOUTHEASTERN PROPERTY
GRANTEE: PROPERTY MANAGEMENT

BUILDING NOTES

BUILDING DIMENSIONS

BAS=[YR=2007] W71 S22 UST=[YR=2007] W4 S8 E4 N8$ S72 W37 S71 E108 N165$.

EXTRA FEATURES

LN	OB/XF CODE	DESCRIPTION	BLD	CAP	L	W	UNITS	UT	Adj R	ADJ UNIT PRICE	ORIG COND	YEAR ON	YEAR ACTUAL	Q	% COND	OB/XF MKT VALUE	NOTES
34	4950	BOLLARD	0	0	0	0	12.00	UT	100.00	100.00	1	2007	2007	3	1	12	
36	0966	FIRE SPRNK	4	0	0	0	14,342.00	SF	3.00	3.00	1	2007	2007	3	1	430	
38	0418	EXHST FAN	0	0	0	0	1.00	UT	400.00	400.00	1	1987	1987	3	1	4	
39	0819	CONC 12"	0	0	0	0	226.00	SF	9.50	9.50	1	2018	2018	3	1	21	
40	0400	CONC CURB	0	0	0	0	45.00	LF	15.00	15.00	1	2018	2018	3	1	7	
42	0097	AWNING CN	0	0	0	0	55.00	SF	65.00	65.00	1	2018	2018	3	1	36	
44	0098	AWNING MTL	0	0	11	4	44.00	SF	13.00	13.00	1	1987	1987	3	1	6	
45	0098	AWNING MTL	0	0	22	4	88.00	SF	13.00	13.00	1	1987	1987	3	1	11	
46	0819	CONC 12"	0	0	11	6	66.00	SF	9.50	9.50	1	2007	2007	3	1	6	
48	0810	CONCRETE A	0	0	0	0	75.00	SF	6.50	6.50	1	2007	2007	3	1	5	

TOTAL OB/XF 538

LAND DESCRIPTION

LN	USE CODE	CLS	LAND USE DESCRIPTION	CAP	RD	LOC ZONE	FRONT	DEPTH	TOT LND UTS	UNIT TYPE	DT	DPTH FACT	% COND	TOT ADJ	UNIT PRICE	ADJ UNIT PRICE	LAND VALUE	OTHER ADJUSTMENTS AND NOTES	YEAR	DENSITY	DECL	FRZ	YR	CONSRV

REVIEW DATE 04/04/2025 BY KW Total Acres: 12.44 Total Land Value: 0 Market: 0 Agricultural: 0 Common: 0 PRINTED 07/30/2025 BY SYS

PT OF GOV'T LOT 5
OR 1548/1576
FOOD LION LEASED PROPERTY

SADLER SQUARE LAND TRUST/PROPERTY MANAGEMENT SUPPO
1 SLEIMAN PARKWAY STE #270
JACKSONVILLE, FL 32216

2025

29-3N-28-0000-0004-0080

NASSAU COUNTY PROPERTY

BUILDING CHARACTERISTICS

ELEMENT	CD	CONSTRUCTION

DOR CODE	1600	COMMUNITY SHOPPING	
MAP NUM		MKT AREA	01
NEIGHBORHOOD/LOC	2004.00		

AREA TYPE	TOTAL GROSS AREA	PCT OF BASE	YEAR	TOT ADJ AREA	SUBAREA MARKET VALUE
TOTALS					

MARKET ADJUSTMENTS

TYPE	MDL	EFF. AREA	TOT ADJ PTS	EFF. BASE RATE	REPL. COST NEW	AYB	EYB	ECON	FNCT		NORM	% COND

VALUATION SUMMARY

VALUATION BY	DIRECT_CAP
Tax Group: 2	Tax Dist:
BUILDING MARKET VALUE	4,721,876
TOTAL MARKET OB/XF VALUE	0
TOTAL LAND VALUE - MARKET	0
TOTAL MARKET VALUE	4,721,876
SOH/AGL Deduction	0
ASSESSED VALUE	4,721,876
TOTAL EXEMPTION VALUE	0
BASE TAXABLE VALUE	4,721,876
TOTAL JUST VALUE	4,721,876
NCON VALUE	0
INCOME VALUE	4,721,876
PREVIOUS YEAR MKT VALUE	4,827,231

PERMIT NUM	DESCRIPTION	AMT	ISSUED
20110746	ELEC OTHER	150	05/16/2011
20110686	ELEC OTHER	400	05/05/2011
20110662	REMODEL	3,800	04/29/2011
20110632	REMODEL	4,000	04/26/2011
20100912	SIGN	225	06/03/2010
20100798	ADDITION	1,000	05/13/2010

SALES DATA

OFF RECORD Number	DATE	TYPE INST	Q U /	V I /	RSN CD	SALE PRICE
1548/1576	1/31/2008	WD	Q	I	02	100
GRANTOR: SOUTHEASTERN PROPERTY						
GRANTEE: PROPERTY MANAGEMENT						
1548/1576	1/31/2008	WD	Q	I	02	100
GRANTOR: SOUTHEASTERN PROPERTY						
GRANTEE: PROPERTY MANAGEMENT						

BLD DATE	04/04/2025	KW	LGL DATE		
XF DATE	04/04/2025	KW	LAND DATE	06/30/2021	KK
INC DATE	07/18/2025	REA	AG DATE		

BUILDING NOTES

EXTRA FEATURES

LN	OB/XF CODE	DESCRIPTION	BLD	CAP	L	W	UNITS	UT	Adj R	ADJ UNIT PRICE	ORIG COND	YEAR ON	YEAR ACTUAL	Q	% COND	OB/XF MKT VALUE	NOTES
49	0966	FIRE SPRNK	2	0	0	0	30,084.00	SF	3.00	3.00	1	2018	2018	3	1	903	
50	0966	FIRE SPRNK	3	0	0	0	28,644.00	SF	3.00	3.00	1	1987	1987	3	1	859	

BUILDING DIMENSIONS

LAND DESCRIPTION

TOTAL OB/XF 1,762

LN	USE CODE	CLS	LAND USE DESCRIPTION	CAP	RD	LOC ZONE	FRONT	DEPTH	TOT LND UTS	UNIT TYPE	DT	DPTH FACT	% COND	TOT ADJ	UNIT PRICE	ADJ UNIT PRICE	LAND VALUE	OTHER ADJUSTMENTS AND NOTES	YEAR	DENSITY	DECL	FRZ	YR	CONSRV

REVIEW DATE 04/04/2025 BY KW Total Acres: 12.44 Total Land Value: 0 Market: 0 Agricultural: 0 Common: 0 PRINTED 07/30/2025 BY SYS