LOT 102
CONCOURSE CROSSING PHASE 2
OR 2583/198

SCHMIDT MELISSA & WILLIAM
95034 ROCKY PL
FERNANDINA BEACH, FL 32034

2025

29-2N-28-0330-0102-0000

NASSAU COUNTY PROPERTY

BUILDING CHARACTERISTICS

ELEMENT	CD	CONSTRUCTION
Exterior Wall	31	HARDIE BRD 100
Roof Structur	03	GABLE/HIP 100
Roof Cover	03	COMP SHNGL 100
Interior Wall	05	DRYWALL 100
Interior Floo	13	LVT/LAMNT 70
Interior Floo	14	CARPET 30
Air Condition	03	CENTRAL 100
Heating Type	04	AIR DUCTED 100
Bedrooms		5 100
Bathrooms		3.5 100
Frame	02	WOOD FRAME 100
Stories	1.	1. 100
Units		0 100
Quality	04	Quality Level 04
DOR CODE	0100	SINGLE FAMILY
MAP NUM		MKT AREA 04
NEIGHBORHOOD/LOC	4095.00	

AREA TYPE	TOTAL GROSS AREA	PCT OF BASE	YEAR	TOT ADJ AREA	SUBAREA MARKET VALUE
BAS	1,817	100	2025	1,817	187,841
FGR	493	55	2025	271	28,016
FOP	128	30	2025	38	3,928
FOP	146	30	2025	44	4,549
FUS	1,416	100	2025	1,416	146,386
STR	84	10	2025	8	827
TOTALS	4,084			3,594	371,548

MARKET ADJUSTMENTS

TYPE	MDL	EFF. AREA	TOT ADJ PTS	EFF. BASE RATE	REPL. COST NEW	AYB	EYB	ECON	FNCT		NORM	% COND
0100	01	3,594	103.3830	103.38	371,548	2024	2024	0	0	0	0.00	100.00

1 SINGLE FAM – 100% - 2025 Heated Area: 3233 HX Base Yr 2025

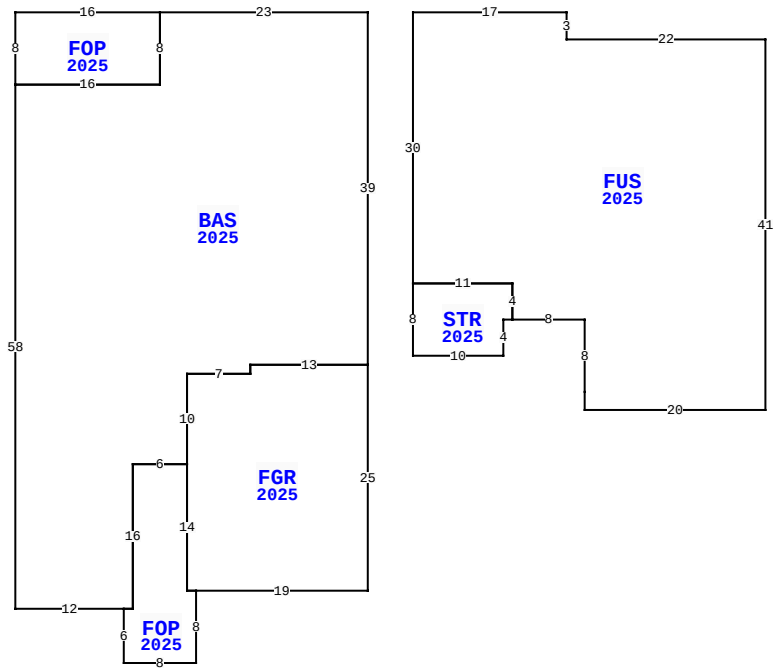

95034 ROCKY PL, FERNANDINA BEACH

BLD DATE		LGL DATE	
XF DATE		LAND DATE	04/23/2025 MLU
INC DATE		AG DATE	

NASSAU COUNTY PROPERTY — VALUATION SUMMARY

VALUATION BY		STANDARD
Tax Group: 4	Tax Dist:	
BUILDING MARKET VALUE		371,548
TOTAL MARKET OB/XF VALUE		5,168
TOTAL LAND VALUE - MARKET		85,000
TOTAL MARKET VALUE		461,716
SOH/AGL Deduction		63,766
ASSESSED VALUE		397,950
TOTAL EXEMPTION VALUE	HX HB	50,722
BASE TAXABLE VALUE		347,228
TOTAL JUST VALUE		461,716
NCON VALUE		376,716
INCOME VALUE		
PREVIOUS YEAR MKT VALUE		70,000

PERMIT NUM	DESCRIPTION	AMT	ISSUED
E250002179	861-388 855-872 8	90,000	03/03/2025
CO240003540	PRIVATE PROVIDER	574,384	03/27/2024
B230012744	SFR H3221 G493	574,384	10/03/2023

SALES DATA

OFF RECORD Number	DATE	TYPE INST	Q / U	V / I	RSN CD	SALE PRICE
2703/31	3/29/2024	WD	Q	I	01	534,500

GRANTOR: CENTURY COMMUNITIES O
GRANTEE: SCHMIDT MELISSA & W

BUILDING NOTES

EXTRA FEATURES

L N	OB/XF CODE	DESCRIPTION	BLD	CAP	L	W	UNITS	UT	Adj R	ADJ UNIT PRICE	ORIG COND	YEAR ON	YEAR ACTUAL	Q	% COND	OB/XF MKT VALUE	NOTES
1	0810	CONCRETE A	0	100	0	0	795.00	SF	6.50	6.50	100	2025	2024		100	5,168	

BUILDING DIMENSIONS

BAS=[YR=2025;ORIG=26,18] N8 E23 S39 W13 S1 W7 S10 W6 S16 W1 W12 N58 E16 $
FOP=[YR=2025;ORIG=26,18] W16 N8 E16 S8 $
FGR=[YR=2025;ORIG=29,50] E7 N1 E13 S25 W19 W1 N14 N10 $
FOP=[YR=2025;ORIG=23,60] E6 S14 E1 S8 W8 N6 E1 N16 $
FUS=[YR=2025;ORIG=54,10] E17 S3 E22 S41 W20 N2 N8 W8 N4 W11 N30 $
STR=[YR=2025;ORIG=54,40] E11 S4 W1 S4 W10 N8 $
.

LAND DESCRIPTION

TOTAL OB/XF 5,168

L N	USE CODE	CLS	LAND USE DESCRIPTION	CAP	R D	LOC ZONE	FRONT	DEPTH	TOT LND UTS	UNIT TYPE	D T	DPTH FACT	% COND	TOT ADJ	UNIT PRICE	ADJ UNIT PRICE	LAND VALUE	OTHER ADJUSTMENTS AND NOTES	YEAR	DENSITY	DECL	FRZ	YR	CONSRV
1	000100	C	RES	100		PUD	0.00	0.00	1.00	LT		1.00	1.00	1.00	85,000.00	85,000.00	85,000							

REVIEW DATE 07/01/2024 BY TW Total Acres: 0.00 Total Land Value: 85,000 Market: 0 Agricultural: 0 Common: 85,000 PRINTED 07/30/2025 BY SYS