LOT 98
CONCOURSE CROSSING PHASE 2
OR 2583/198

VARNEY SAVANNA & NICHOLAS
95093 ROCKY PL
FERNANDINA BEACH, FL 32034

**2025**

**29-2N-28-0330-0098-0000**

## NASSAU COUNTY PROPERTY



## BUILDING CHARACTERISTICS

| ELEMENT | CD | CONSTRUCTION |
|---|---|---|
| Exterior Wall | 31 | HARDIE BRD 100 |
| Roof Structur | 03 | GABLE/HIP 100 |
| Roof Cover | 03 | COMP SHNGL 100 |
| Interior Wall | 05 | DRYWALL 100 |
| Interior Floo | 13 | LVT/LAMNT 50 |
| Interior Floo | 14 | CARPET 50 |
| Air Condition | 03 | CENTRAL 100 |
| Heating Type | 04 | AIR DUCTED 100 |
| Bedrooms | | 4 100 |
| Bathrooms | | 3.5 100 |
| Frame | 02 | WOOD FRAME 100 |
| Stories | 2. | 2. 100 |
| Units | | 0 100 |
| Quality | 04 | Quality Level 04 |
| DOR CODE | 0100 | SINGLE FAMILY |
| MAP NUM | | MKT AREA 04 |
| NEIGHBORHOOD/LOC | 4095.00 | |

| AREA TYPE | TOTAL GROSS AREA | PCT OF BASE | YEAR | TOT ADJ AREA | SUBAREA MARKET VALUE |
|---|---|---|---|---|---|
| BAS | 1,335 | 100 | 2025 | 1,335 | 141,857 |
| FGR | 540 | 55 | 2025 | 297 | 31,559 |
| FOP | 120 | 30 | 2025 | 36 | 3,825 |
| FOP | 171 | 30 | 2025 | 51 | 5,419 |
| FUS | 1,685 | 100 | 2025 | 1,685 | 179,048 |
| STR | 70 | 10 | 2025 | 7 | 744 |
| TOTALS | 3,921 | | | 3,411 | 362,453 |

## MARKET ADJUSTMENTS

| TYPE | MDL | EFF. AREA | TOT ADJ PTS | EFF. BASE RATE | REPL. COST NEW | AYB | EYB | ECON | FNCT | | NORM | % COND |
|---|---|---|---|---|---|---|---|---|---|---|---|---|
| 0100 | 01 | 3,411 | 106.2600 | 106.26 | 362,453 | 2024 | 2024 | 0 | 0 | 0 | 0.00 | 100.00 |

1 SINGLE FAM – 0% - 2025 Heated Area: 3020 HX Base Yr

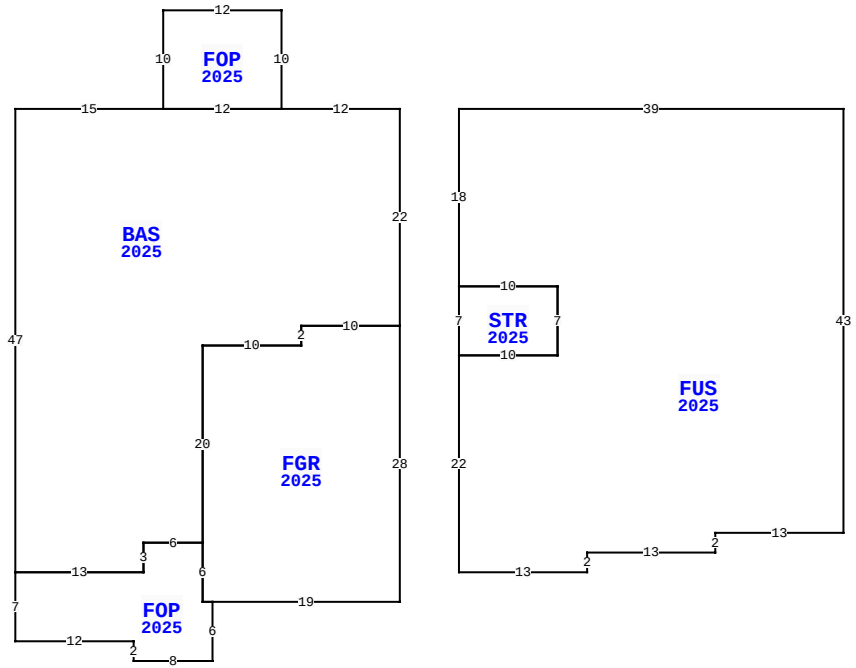


95093 ROCKY PL, FERNANDINA BEACH

| | | | |
|---|---|---|---|
| BLD DATE | | LGL DATE | |
| XF DATE | | LAND DATE | 04/23/2025 MLU |
| INC DATE | | AG DATE | |

## VALUATION SUMMARY

| | |
|---|---|
| VALUATION BY | STANDARD |
| Tax Group: 4 | Tax Dist: |
| BUILDING MARKET VALUE | 362,453 |
| TOTAL MARKET OB/XF VALUE | 5,857 |
| TOTAL LAND VALUE - MARKET | 85,000 |
| TOTAL MARKET VALUE | 453,310 |
| SOH/AGL Deduction | 0 |
| ASSESSED VALUE | 453,310 |
| TOTAL EXEMPTION VALUE | 0 |
| BASE TAXABLE VALUE | 453,310 |
| TOTAL JUST VALUE | 453,310 |
| NCON VALUE | 368,310 |
| INCOME VALUE | |
| PREVIOUS YEAR MKT VALUE | 70,000 |

| PERMIT NUM | DESCRIPTION | AMT | ISSUED |
|---|---|---|---|
| CO240005264 | PRIVATE PROVIDER | 542,075 | 05/01/2024 |
| B230012695 | SFR H3013 G 522 | 54,075 | 10/03/2023 |

## SALES DATA

| OFF RECORD Number | DATE | TYPE INST | Q / U | V / I | RSN CD | SALE PRICE |
|---|---|---|---|---|---|---|
| 2709/493 | 4/30/2024 | WD | Q | I | 01 | 500,000 |

GRANTOR: CENTURY COMMUNITIES O

GRANTEE: VARNEY SAVANNA & NI

## BUILDING NOTES

## BUILDING DIMENSIONS

BAS=[YR=2025;ORIG=10,10] E15 E12 E12 S22 W10 S2 W10 S20 W6 S3 W13 N47 $
FOP=[YR=2025;ORIG=25,10] E12 N10 W12 S10 $
FGR=[YR=2025;ORIG=29,34] E10 N2 E10 S28 W19 W1 N6 N20 $
FOP=[YR=2025;ORIG=29,54] W6 S3 W13 S7 E12 S2 E8 N6 W1 N6 $
FUS=[YR=2025;ORIG=55,10] E39 S43 W13 S2 W13 S2 W13 N22 E10 N7 W10 N18 $
STR=[YR=2025;ORIG=55,28] E10 S7 W10 N7 $
.

## EXTRA FEATURES

| LN | OB/XF CODE | DESCRIPTION | BLD | CAP | L | W | UNITS | UT | Adj R | ADJ UNIT PRICE | ORIG COND | YEAR ON | YEAR ACTUAL | Q | % COND | OB/XF MKT VALUE | NOTES |
|---|---|---|---|---|---|---|---|---|---|---|---|---|---|---|---|---|---|
| 1 | 0810 | CONCRETE A | 0 | 0 | 0 | 0 | 901.00 | SF | 6.50 | 6.50 | 100 | 2025 | 2024 | | 100 | 5,857 | |

## LAND DESCRIPTION

TOTAL OB/XF 5,857

| LN | USE CODE | CLS | LAND USE DESCRIPTION | CAP | RD | LOC ZONE | FRONT | DEPTH | TOT LND UTS | UNIT TYPE | DT | DPTH FACT | % COND | TOT ADJ | UNIT PRICE | ADJ UNIT PRICE | LAND VALUE | OTHER ADJUSTMENTS AND NOTES | YEAR | DENSITY | DECL | FRZ | YR | CONSRV |
|---|---|---|---|---|---|---|---|---|---|---|---|---|---|---|---|---|---|---|---|---|---|---|---|---|
| 1 | 000134 | C | RES POND | 0 | | PUD | 0.00 | 0.00 | 1.00 | LT | | 1.00 | 1.00 | 1.00 | 85,000.00 | 85,000.00 | 85,000 | | | | | | | |

REVIEW DATE 07/02/2024 BY TW Total Acres: 0.00 Total Land Value: 85,000 Market: 0 Agricultural: 0 Common: 85,000 PRINTED 07/30/2025 BY SYS