LOT 88
CONCOURSE CROSSING PHASE 2
OR 2583/198

SLOPER MELISSA & WILLIAM JUSTIN
95209 LOCK ST
FERNANDINA BEACH, FL 32034

2025

29-2N-28-0330-0088-0000

NASSAU COUNTY PROPERTY

BUILDING CHARACTERISTICS

ELEMENT	CD	CONSTRUCTION
Exterior Wall	31	HARDIE BRD 100
Roof Structur	03	GABLE/HIP 100
Roof Cover	03	COMP SHNGL 100
Interior Wall	05	DRYWALL 100
Interior Floo	13	LVT/LAMNT 50
Interior Floo	14	CARPET 50
Air Condition	03	CENTRAL 100
Heating Type	04	AIR DUCTED 100
Bedrooms		4 100
Bathrooms		3 100
Frame	02	WOOD FRAME 100
Stories	2.	2. 100
Units		0 100
Quality	04	Quality Level 04

DOR CODE 0100 SINGLE FAMILY
MAP NUM | MKT AREA 04
NEIGHBORHOOD/LOC 4095.00

AREA TYPE	TOTAL GROSS AREA	PCT OF BASE	YEAR	TOT ADJ AREA	SUBAREA MARKET VALUE
BAS	1,335	100	2025	1,335	139,281
FGR	540	55	2025	297	30,986
FOP	120	30	2025	36	3,756
FOP	171	30	2025	51	5,321
FUS	1,685	100	2025	1,685	175,796
STR	70	10	2025	7	730
TOTALS	3,921			3,411	355,870

MARKET ADJUSTMENTS

TYPE	MDL	EFF. AREA	TOT ADJ PTS	EFF. BASE RATE	REPL. COST NEW	AYB	EYB	ECON	FNCT		NORM	% COND
0100	01	3,411	104.3280	104.33	355,870	2024	2024	0	0	0	0.00	100.00

1 SINGLE FAM – 0% - 2025 Heated Area: 3020 HX Base Yr

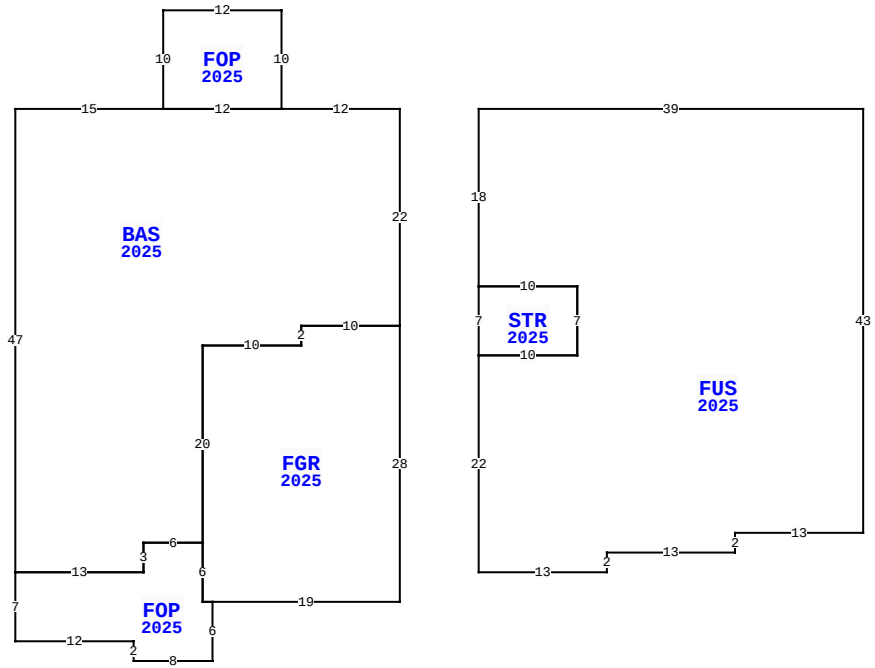

95209 LOCK ST, FERNANDINA BEACH

BLD DATE		LGL DATE	
XF DATE		LAND DATE	04/23/2025 MLU
INC DATE		AG DATE	

VALUATION SUMMARY

VALUATION BY	STANDARD
Tax Group: 4	Tax Dist:
BUILDING MARKET VALUE	355,870
TOTAL MARKET OB/XF VALUE	4,511
TOTAL LAND VALUE - MARKET	85,000
TOTAL MARKET VALUE	445,381
SOH/AGL Deduction	0
ASSESSED VALUE	445,381
TOTAL EXEMPTION VALUE	0
BASE TAXABLE VALUE	445,381
TOTAL JUST VALUE	445,381
NCON VALUE	360,381
INCOME VALUE	
PREVIOUS YEAR MKT VALUE	70,000

PERMIT NUM	DESCRIPTION	AMT	ISSUED
240010307	CO		09/06/2024
B230013491	SFR H3013 G522	524,075	10/19/2023

SALES DATA

OFF RECORD Number	DATE	TYPE INST	Q U	V I	RSN CD	SALE PRICE
2737/1666	9/10/2024	WD	Q	I	01	527,500

GRANTOR: CENTURY COMMUNITIES O
GRANTEE: SLOPER MELISSA & WI

BUILDING NOTES

BUILDING DIMENSIONS

BAS=[YR=2025;ORIG=10,10] E15 E12 E12 S22 W10 S2 W10 S20 W6 S3 W13 N47 $
FOP=[YR=2025;ORIG=25,10] E12 N10 W12 S10 $
FGR=[YR=2025;ORIG=29,34] E10 N2 E10 S28 W19 W1 N6 N20 $
FOP=[YR=2025;ORIG=29,54] W6 S3 W13 S7 E12 S2 E8 N6 W1 N6 $
FUS=[YR=2025;ORIG=57,10] E39 S43 W13 S2 W13 S2 W13 N22 E10 N7 W10 N18 $
STR=[YR=2025;ORIG=57,28] E10 S7 W10 N7 $
.

EXTRA FEATURES

LN	OB/XF CODE	DESCRIPTION	BLD	CAP	L	W	UNITS	UT	Adj R	ADJ UNIT PRICE	ORIG COND	YEAR ON	YEAR ACTUAL	Q	% COND	OB/XF MKT VALUE	NOTES
1	0810	CONCRETE A	0	0	0	0	694.00	SF	6.50	6.50	100	2025	2024		100	4,511	

LAND DESCRIPTION

TOTAL OB/XF 4,511

LN	USE CODE	CLS	LAND USE DESCRIPTION	CAP	RD	LOC ZONE	FRONT	DEPTH	TOT LND UTS	UNIT TYPE	DT	DPTH FACT	% COND	TOT ADJ	UNIT PRICE	ADJ UNIT PRICE	LAND VALUE	OTHER ADJUSTMENTS AND NOTES	YEAR	DENSITY	DECL	FRZ	YR	CONSRV
1	000135	C	RES NATURAL	0		PUD	0.00	0.00	1.00	LT		1.00	1.00	1.00	85,000.00	85,000.00	85,000							

REVIEW DATE 10/03/2024 BY TW Total Acres: 0.00 Total Land Value: 85,000 Market: 0 Agricultural: 0 Common: 85,000 PRINTED 07/30/2025 BY SYS