LOT 68
CONCOURSE CROSSING PHASE 1
OR 2554/1692

BORNHORST SUE ELLEN/RODRIGUEZ RAMON
95080 SWEETBERRY WAY
FERNANDINA BEACH, FL 32034

2025

29-2N-28-0330-0068-0000

BUILDING CHARACTERISTICS

ELEMENT	CD	CONSTRUCTION
Exterior Wall	31	HARDIE BRD 100
Roof Structur	03	GABLE/HIP 100
Roof Cover	03	COMP SHNGL 100
Interior Wall	05	DRYWALL 100
Interior Floo	13	LVT/LAMNT 50
Interior Floo	14	CARPET 50
Air Condition	03	CENTRAL 100
Heating Type	04	AIR DUCTED 100
Bedrooms		4 100
Bathrooms		2.5 100
Frame	02	WOOD FRAME 100
Stories	2.	2. 100
Units		0 100
Quality	04	Quality Level 04

DOR CODE 0100 SINGLE FAMILY
MAP NUM | MKT AREA 04
NEIGHBORHOOD/LOC 4095.00

AREA TYPE	TOTAL GROSS AREA	PCT OF BASE	YEAR	TOT ADJ AREA	SUBAREA MARKET VALUE
BAS	1,245	100	2025	1,245	138,046
FGR	483	55	2025	266	29,494
FOP	100	30	2025	30	3,326
FOP	182	30	2025	55	6,098
FUS	976	100	2025	976	108,219
STR	44	10	2025	4	444
TOTALS	3,030			2,576	285,627

MARKET ADJUSTMENTS

TYPE	MDL	EFF. AREA	TOT ADJ PTS	EFF. BASE RATE	REPL. COST NEW	AYB	EYB	ECON	FNCT		NORM	% COND
0100	01	2,576	110.8800	110.88	285,627	2024	2024	0	0	0	0.00	100.00

1 SINGLE FAM – 0% - 2025 Heated Area: 2221 HX Base Yr

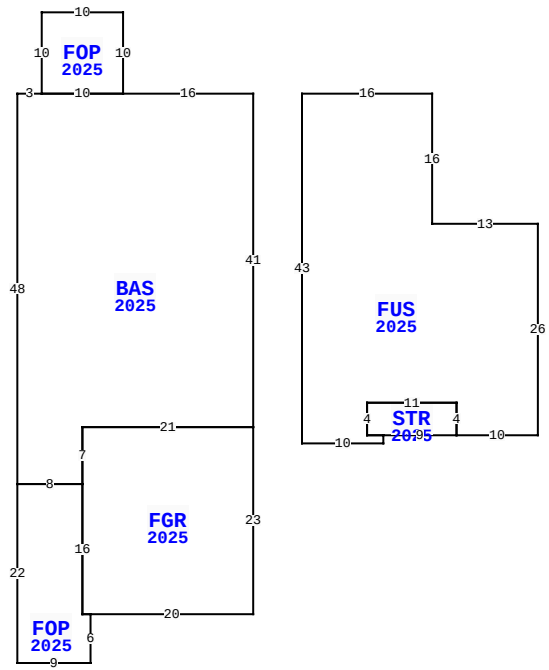

95121 TERRI'S WAY, FERNANDINA BEACH

BLD DATE		LGL DATE	
XF DATE		LAND DATE	04/23/2025 MLU
INC DATE		AG DATE	

NASSAU COUNTY PROPERTY

PAGE 1 of 1 4

VALUATION SUMMARY

VALUATION BY	STANDARD
Tax Group: 4	Tax Dist:
BUILDING MARKET VALUE	285,627
TOTAL MARKET OB/XF VALUE	4,752
TOTAL LAND VALUE - MARKET	85,000
TOTAL MARKET VALUE	375,379
SOH/AGL Deduction	0
ASSESSED VALUE	375,379
TOTAL EXEMPTION VALUE	0
BASE TAXABLE VALUE	375,379
TOTAL JUST VALUE	375,379
NCON VALUE	290,379
INCOME VALUE	
PREVIOUS YEAR MKT VALUE	60,000

PERMIT NUM	DESCRIPTION	AMT	ISSUED
CO240011021			09/26/2024
B230009057	H2225	358,349	07/17/2023

SALES DATA

OFF RECORD Number	DATE	TYPE INST	Q U	V I	RSN CD	SALE PRICE
2765/1102	2/04/2025	QC	U	I	11	157,100
GRANTOR: RODRIGUEZ RAMON						
GRANTEE: BORNHORST SUE ELLEN						
2741/677	9/27/2024	WD	Q	I	02	420,000
GRANTOR: CENTURY COMMUNITIES O						
GRANTEE: RODRIGUEZ RAMON						

BUILDING NOTES

BUILDING DIMENSIONS

BAS=[YR=2025;ORIG=10,10] E3 E10 E16 S41 W21 S7 W8 N48 $
FOP=[YR=2025;ORIG=13,10] E10 N10 W10 S10 $
FGR=[YR=2025;ORIG=18,51] E21 S23 W20 W1 N16 N7 $
FOP=[YR=2025;ORIG=18,58] W8 S22 E9 N6 W1 N16 $
FUS=[YR=2025;ORIG=45,10] E16 S16 E13 S26 W10 N4 W11 S4 E2 S1 W10 N43 $
STR=[YR=2025;ORIG=53,48] E11 S4 W9 W2 N4 $
.

EXTRA FEATURES

LN	OB/XF CODE	DESCRIPTION	BLD	CAP	L	W	UNITS	UT	Adj R	ADJ UNIT PRICE	ORIG COND	YEAR ON	YEAR ACTUAL	Q	% COND	OB/XF MKT VALUE	NOTES
1	0810	CONCRETE A	0	0	0	0	731.00	SF	6.50	6.50	100	2025	2024		100	4,752	

LAND DESCRIPTION

TOTAL OB/XF 4,752

LN	USE CODE	CLS	LAND USE DESCRIPTION	CAP	RD	LOC ZONE	FRONT	DEPTH	TOT LND UTS	UNIT TYPE	DT	DPTH FACT	% COND	TOT ADJ	UNIT PRICE	ADJ UNIT PRICE	LAND VALUE	OTHER ADJUSTMENTS AND NOTES	YEAR	DENSITY	DECL	FRZ	YR	CONSRV
1	000100	C	RES	0		PUD	0.00	0.00	1.00	LT		1.00	1.00	1.00	85,000.00	85,000.00	85,000							

REVIEW DATE 10/03/2024 BY TW Total Acres: 0.00 Total Land Value: 85,000 Market: 0 Agricultural: 0 Common: 85,000 PRINTED 07/30/2025 BY SYS