UNIT 4 LOT D
CONCOURSE CROSSING PHASE 1
OR 2554/1692

JACOB SONYA
95108 TERRI'S WAY
FERNANDINA BEACH, FL 32034

2025

29-2N-28-0330-0004-00D0

NASSAU COUNTY PROPERTY

BUILDING CHARACTERISTICS

ELEMENT	CD	CONSTRUCTION
Exterior Wall	31	HARDIE BRD 100
Roof Structur	03	GABLE/HIP 100
Roof Cover	03	COMP SHNGL 80
Roof Cover	12	MODULAR MT 20
Interior Wall	05	DRYWALL 100
Interior Floo	13	LVT/LAMNT 50
Interior Floo	14	CARPET 50
Air Condition	03	CENTRAL 100
Heating Type	04	AIR DUCTED 100
Bedrooms		3 100
Bathrooms		2.5 100
Frame	02	WOOD FRAME 100
Stories	2.	2. 100
Units		0 100
Quality	03	Quality Level 03
DOR CODE	0100	SINGLE FAMILY
MAP NUM		MKT AREA 04
NEIGHBORHOOD/LOC	4095.00	

AREA TYPE	TOTAL GROSS AREA	PCT OF BASE	YEAR	TOT ADJ AREA	SUBAREA MARKET VALUE
BAS	752	100	2024	752	81,953
FGR	285	55	2024	157	17,110
FOP	25	30	2024	8	872
FOP	144	30	2024	43	4,686
FUS	1,072	100	2024	1,072	116,827
STR	52	10	2024	5	545
TOTALS	2,330			2,037	221,992

MARKET ADJUSTMENTS

TYPE	MDL	EFF. AREA	TOT ADJ PTS	EFF. BASE RATE	REPL. COST NEW	AYB	EYB	ECON	FNCT		NORM	% COND
0320	01	2,037	108.9760	108.98	221,992	2023	2023	0	0	0	0.00	100.00

1 TOWNHOUSE – 100% - 2024 Heated Area: 1824 HX Base Yr 2024

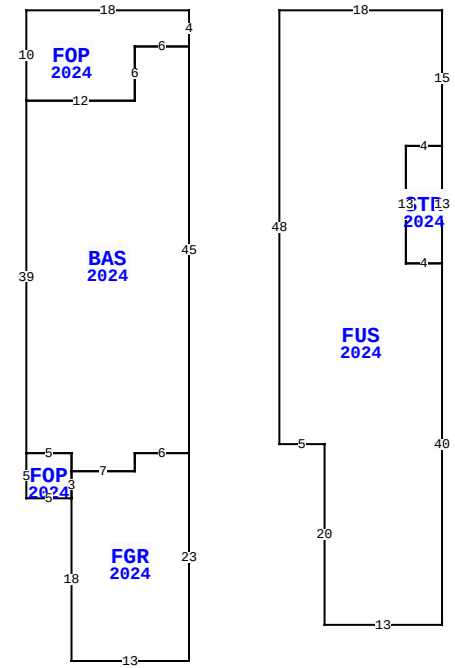

95108 TERRI'S WAY, FERNANDINA BEACH

BLD DATE		LGL DATE	
XF DATE		LAND DATE	04/23/2025 MLU
INC DATE		AG DATE	

VALUATION SUMMARY

VALUATION BY		STANDARD
Tax Group: 4	Tax Dist:	
BUILDING MARKET VALUE		221,992
TOTAL MARKET OB/XF VALUE		2,496
TOTAL LAND VALUE - MARKET		42,500
TOTAL MARKET VALUE		266,988
SOH/AGL Deduction		0
ASSESSED VALUE		266,988
TOTAL EXEMPTION VALUE	HX HB	50,722
BASE TAXABLE VALUE		216,266
TOTAL JUST VALUE		266,988
NCON VALUE		0
INCOME VALUE		
PREVIOUS YEAR MKT VALUE		259,470

PERMIT NUM	DESCRIPTION	AMT	ISSUED
22017930	NEW CONSTR	322,377	12/07/2022

SALES DATA

OFF RECORD Number	DATE	TYPE INST	Q / U	V / I	RSN CD	SALE PRICE
2670/1029	9/26/2023	WD	Q	I	01	300,000

GRANTOR: CENTURY COMMUNITIES O

GRANTEE: JACOB SONYA

BUILDING NOTES

BUILDING DIMENSIONS

BAS=[YR=2024;ORIG=70,10] W6 S6 W12 S39 E5 S2 E7 N2 E6 N45 $
FOP=[YR=2024;ORIG=70,6] W18 S10 E12 N6 E6 N4 $
FGR=[YR=2024;ORIG=57,57] E7 N2 E6 S23 W13 N18 N3 $
FOP=[YR=2024;ORIG=52,55] E5 S2 S3 W5 N5 $
FUS=[YR=2024;ORIG=80,6] E18 S15 W4 S13 E4 S40 W13 N20 W5 N48 $
STR=[YR=2024;ORIG=98,21] W4 S13 E4 N13 $
.

EXTRA FEATURES

LN	OB/XF CODE	DESCRIPTION	BLD	CAP	L	W	UNITS	UT	Adj R	ADJ UNIT PRICE	ORIG COND	YEAR ON	YEAR ACTUAL	Q	% COND	OB/XF MKT VALUE	NOTES
1	0810	CONCRETE A	0	100	0	0	384.00	SF	6.50	6.50	100	2024	2023		100	2,496	

LAND DESCRIPTION

TOTAL OB/XF 2,496

LN	USE CODE	CLS	LAND USE DESCRIPTION	CAP	RD	LOC ZONE	FRONT	DEPTH	TOT LND UTS	UNIT TYPE	DT	DPTH FACT	% COND	TOT ADJ	UNIT PRICE	ADJ UNIT PRICE	LAND VALUE	OTHER ADJUSTMENTS AND NOTES	YEAR	DENSITY	DECL	FRZ	YR	CONSRV
1	000310	C	TOWNHOUSE	100		PUD	0.00	0.00	1.00	LT		1.00	1.00	1.00	42,500.00	42,500.00	42,500							

REVIEW DATE 12/05/2023 BY DJ Total Acres: 0.00 Total Land Value: 42,500 Market: 0 Agricultural: 0 Common: 42,500 PRINTED 07/30/2025 BY SYS