LOT 120
SANDY POINTE PRESERVE PHASE 1
PBK 8/289

LOUGH RODGER & FABIOLA 2015 TRUST/LOUGH RODGER B T
PO BOX 16002
FERNANDINA BEACH, FL 32035

2025

29-2N-28-0117-0120-0000

NASSAU COUNTY PROPERTY

BUILDING CHARACTERISTICS

ELEMENT	CD	CONSTRUCTION
Exterior Wall	31	HARDIE BRD 100
Roof Structur	03	GABLE/HIP 100
Roof Cover	03	COMP SHNGL 100
Interior Wall	05	DRYWALL 100
Interior Floo	13	LVT/LAMNT 70
Interior Floo	14	CARPET 30
Air Condition	03	CENTRAL 100
Heating Type	04	AIR DUCTED 100
Bedrooms		4 100
Bathrooms		3 100
Frame	02	WOOD FRAME 100
Stories	1.	1. 100
Units		0 100
Quality	02	Quality Level 02

DOR CODE 0100 SINGLE FAMILY
MAP NUM | MKT AREA 04
NEIGHBORHOOD/LOC 4087.00

AREA TYPE	TOTAL GROSS AREA	PCT OF BASE	YEAR	TOT ADJ AREA	SUBAREA MARKET VALUE
BAS	2,448	100	2025	2,448	318,583
FGR	753	55	2025	414	53,878
FOP	66	30	2025	20	2,603
FOP	273	30	2025	82	10,671
TOTALS	3,540			2,964	385,735

MARKET ADJUSTMENTS

TYPE	MDL	EFF. AREA	TOT ADJ PTS	EFF. BASE RATE	REPL. COST NEW	AYB	EYB	ECON	FNCT		NORM	% COND
0900	01	2,964	98.5872	130.14	385,735	2024	2024	0	0	0	0.00	100.00

1 SNGL FAM – 0% - 2025 Heated Area: 2448 HX Base Yr

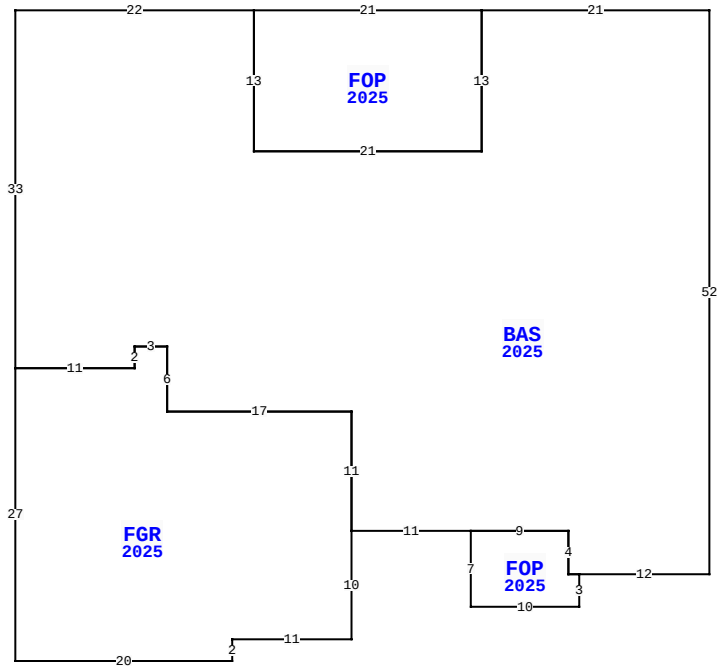

94983 S PALM POINTE DR, FERNANDINA BEACH

BLD DATE		LGL DATE	
XF DATE		LAND DATE	05/06/2025 MLU
INC DATE		AG DATE	

VALUATION SUMMARY

VALUATION BY	STANDARD
Tax Group: 4	Tax Dist:
BUILDING MARKET VALUE	385,735
TOTAL MARKET OB/XF VALUE	8,510
TOTAL LAND VALUE - MARKET	125,000
TOTAL MARKET VALUE	519,245
SOH/AGL Deduction	0
ASSESSED VALUE	519,245
TOTAL EXEMPTION VALUE	0
BASE TAXABLE VALUE	519,245
TOTAL JUST VALUE	519,245
NCON VALUE	394,245
INCOME VALUE	
PREVIOUS YEAR MKT VALUE	75,000

PERMIT NUM	DESCRIPTION	AMT	ISSUED
240010577	CO		09/16/2024
B240003995	NSFR T-3544 H-245	465,614	04/08/2024

SALES DATA

OFF RECORD Number	DATE	TYPE INST	Q U	V I	RSN CD	SALE PRICE
2746/191	10/25/2024	SW	Q	I	01	623,900

GRANTOR: SEDA CONSTRUCTION COM
GRANTEE: LOUGH RODGER & FABI

BUILDING NOTES

BUILDING DIMENSIONS

BAS=[YR=2025;ORIG=10,10] E22 S13 E21 N13 E21 S52 W12 W1 N4 W9 W11 N11 W17 N6 W3 S2 W11 N33 $
FOP=[YR=2025;ORIG=32,23] E21 N13 W21 S13 $
FGR=[YR=2025;ORIG=10,43] E11 N2 E3 S6 E17 S11 S10 W11 S2 W20 N27 $
FOP=[YR=2025;ORIG=52,58] E9 S4 E1 S3 W10 N7 $
.

EXTRA FEATURES

LN	OB/XF CODE	DESCRIPTION	BLD	CAP	L	W	UNITS	UT	Adj R	ADJ UNIT PRICE	ORIG COND	YEAR ON	YEAR ACTUAL	Q	% COND	OB/XF MKT VALUE	NOTES
1	0855	CONC PAVER	0	0	0	0	851.00	SF	10.00	10.00	100	2025	2024		100	8,510	

LAND DESCRIPTION

TOTAL OB/XF 8,510

LN	USE CODE	CLS	LAND USE DESCRIPTION	CAP	RD	LOC ZONE	FRONT	DEPTH	TOT LND UTS	UNIT TYPE	DT	DPTH FACT	% COND	TOT ADJ	UNIT PRICE	ADJ UNIT PRICE	LAND VALUE	OTHER ADJUSTMENTS AND NOTES	YEAR	DENSITY	DECL	FRZ	YR	CONSRV
1	000100	C	RES	0		RSF-2	0.00	0.00	1.00	LT		1.00	1.00	1.00	125,000.00	125,000.00	125,000							

REVIEW DATE 08/13/2024 BY TWWW Total Acres: 0.00 Total Land Value: 125,000 Market: 0 Agricultural: 0 Common: 125,000 PRINTED 07/30/2025 BY SYS