LOT 102
HARBOR CONCOURSE PHASE 2
PB 8/162

DOUGLAS PHILIP L/E/
97097 HARBOR CONCOURSE CIRCLE
FERNANDINA BEACH, FL 32034

2025

29-2N-28-0115-0102-0000

NASSAU COUNTY PROPERTY

BUILDING CHARACTERISTICS

ELEMENT	CD	CONSTRUCTION
Exterior Wall	31	HARDIE BRD 100
Roof Structur	03	GABLE/HIP 100
Roof Cover	03	COMP SHNGL 100
Interior Wall	05	DRYWALL 100
Interior Floo	13	LVT/LAMNT 50
Interior Floo	14	CARPET 50
Air Condition	03	CENTRAL 100
Heating Type	04	AIR DUCTED 100
Bedrooms		3 100
Bathrooms		2.5 100
Frame	02	WOOD FRAME 100
Stories	2.	2. 100
Units		0 100
Occupancy	00	NONE 100
Quality	04	Quality Level 04
DOR CODE	0100	SINGLE FAMILY
MAP NUM		MKT AREA 04
NEIGHBORHOOD/LOC	4145.00	

AREA TYPE	TOTAL GROSS AREA	PCT OF BASE	YEAR	TOT ADJ AREA	SUBAREA MARKET VALUE
BAS	1,136	100	2019	1,136	122,316
FGR	441	55	2019	243	26,164
FOP	83	30	2019	25	2,692
FOP	160	30	2019	48	5,169
FUS	1,184	100	2019	1,184	127,484
PTO	160	5	2019	8	861
STR	30	10	2019	3	323
TOTALS	3,194			2,647	285,009

MARKET ADJUSTMENTS

TYPE	MDL	EFF. AREA	TOT ADJ PTS	EFF. BASE RATE	REPL. COST NEW	AYB	EYB	ECON	FNCT		NORM	% COND
0100	01	2,647	109.8720	109.87	290,826	2019	2019	0	0	0	2.00	98.00

1 SINGLE FAM – 100% - 2024 Heated Area: 2320 HX Base Yr 2024

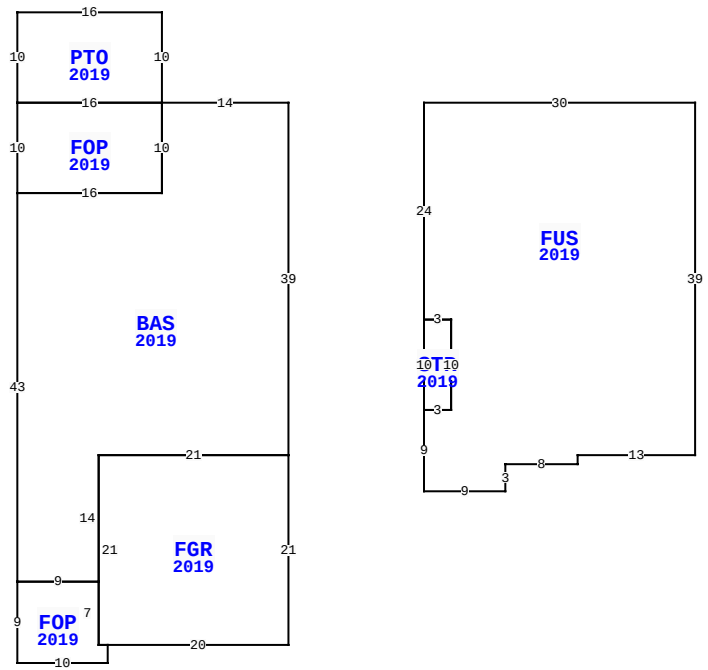

97097 HARBOR CONCOURSE CIR, FERNANDINA BEACH

BLD DATE	03/30/2023 NW	LGL DATE	
XF DATE		LAND DATE	04/23/2025 MLU
INC DATE		AG DATE	

NASSAU COUNTY PROPERTY — VALUATION SUMMARY

VALUATION BY		STANDARD
Tax Group: 4	Tax Dist:	
BUILDING MARKET VALUE		285,009
TOTAL MARKET OB/XF VALUE		11,614
TOTAL LAND VALUE - MARKET		85,000
TOTAL MARKET VALUE		381,623
SOH/AGL Deduction		12,277
ASSESSED VALUE		369,346
TOTAL EXEMPTION VALUE	HX HB WR	55,722
BASE TAXABLE VALUE		313,624
TOTAL JUST VALUE		381,623
NCON VALUE		0
INCOME VALUE		
PREVIOUS YEAR MKT VALUE		358,937

PERMIT NUM	DESCRIPTION	AMT	ISSUED
C1901088	CO ISSUED	0	06/24/2019
19001088	NEW CONSTR	306,624	02/04/2019

SALES DATA

OFF RECORD Number	DATE	TYPE INST	Q / U	V / I	RSN CD	SALE PRICE
2721/177	6/25/2024	LE	U	I	11	100
GRANTOR: DOUGLAS PHILIP						
GRANTEE: DOUGLAS CAELAN COLE						
2614/1535	1/23/2023	WD	Q	I	01	460,000
GRANTOR: DURRANCE PRESTON III						
GRANTEE: DOUGLAS PHILIP						

BUILDING NOTES

EXTRA FEATURES

LN	OB/XF CODE	DESCRIPTION	BLD	CAP	L	W	UNITS	UT	Adj R	ADJ UNIT PRICE	ORIG COND	YEAR ON	YEAR ACTUAL	Q	% COND	OB/XF MKT VALUE	NOTES
1	0810	CONCRETE A	0	100	0	0	30.00	SF	6.50	6.50	100	2019	2019	3	97	189	
2	0811	CONCRETE B	0	100	0	0	643.00	SF	5.20	5.20	100	2019	2019	3	97	3,243	
3	0500	FP-PRE FAB	0	100	0	0	1.00	UT	3,500.00	3,500.00	100	2019	2019	3	98	3,430	
4	0462	ST/AL FNC	0	100	120	0	480.00	SF	10.00	10.00	100	2021	2021	3	93	4,464	
5	0463	FENCE GATE	0	100	0	0	1.00	UT	300.00	300.00	100	2021	2021	3	96	288	

BUILDING DIMENSIONS

BAS=[YR=2019] W14 PTO=[YR=2019] N10 W16 S10 FOP=[YR=2019] S10 E16 N10W16$ E16$ S10 W16 S43 FOP=[YR=2019] S9 E10 N2 FGR=[YR=2019] E20 N21 W21 S21 E1$ W1 N7 W9$ E9 N14 E21 N39$PTR= E15 FUS=[YR=2019] E30 S39 W13 S1 W8 S3 W9 N9 STR=[YR=2019] N10 E3 S10 W3$ E3 N10 W3 N24$ W15$.

LAND DESCRIPTION

TOTAL OB/XF 11,614

LN	USE CODE	CLS	LAND USE DESCRIPTION	CAP	RD	LOC ZONE	FRONT	DEPTH	TOT LND UTS	UNIT TYPE	DT	DPTH FACT	% COND	TOT ADJ	UNIT PRICE	ADJ UNIT PRICE	LAND VALUE	OTHER ADJUSTMENTS AND NOTES	YEAR	DENSITY	DECL	FRZ	YR	CONSRV
1	000134	C	RES POND	100		PUD	0.00	0.00	1.00	LT		1.00	1.00	1.00	85,000.00	85,000.00	85,000							

REVIEW DATE 08/06/2019 BY KW Total Acres: 0.00 Total Land Value: 85,000 Market: 0 Agricultural: 0 Common: 85,000 PRINTED 07/30/2025 BY SYS