BLOCK 10 PT LOTS 5,6,7 & 8
IN OR 2782/869
J M DANCY SURVEY UNR

BENNETT ANNETTE R
9616 SHELLIE RD
JACKSONVILLE, FL 32257

2025

29-2N-25-3120-0057-0000

NASSAU COUNTY PROPERTY

BUILDING CHARACTERISTICS

ELEMENT	CD	CONSTRUCTION
Exterior Wall	31	HARDIE BRD 100
Roof Structur	03	GABLE/HIP 100
Roof Cover	03	COMP SHNGL 100
Interior Wall	05	DRYWALL 100
Interior Floo	09	PINE WOOD 100
Air Condition	03	CENTRAL 100
Heating Type	04	AIR DUCTED 100
Bedrooms		3 100
Bathrooms		2 100
Frame	02	WOOD FRAME 100
Stories	2.	2. 100
Units		0 100
BUD8 Adjustme	01	DIST CA 100
Occupancy	00	NONE 100
Quality	02	Quality Level 02

DOR CODE 0100 SINGLE FAMILY
MAP NUM | MKT AREA 07
NEIGHBORHOOD/LOC 1290.100

AREA TYPE	TOTAL GROSS AREA	PCT OF BASE	YEAR	TOT ADJ AREA	SUBAREA MARKET VALUE
BAS	798	100	1993	798	79,878
BAS	84	100	2025	84	8,408
FOP	310	30	2025	93	9,309
FUS	798	100	1993	798	79,878
UOP	84	20	2025	17	1,702
TOTALS	2,074			1,790	179,174

MARKET ADJUSTMENTS

TYPE	MDL	EFF. AREA	TOT ADJ PTS	EFF. BASE RATE	REPL. COST NEW	AYB	EYB	ECON	FNCT		NORM	% COND
0900	01	1,790	98.8000	130.42	233,452	1900	1960	0	0	0	23.25	76.75

1 SNGL FAM – 0% - 0 Heated Area: 1680 HX Base Yr

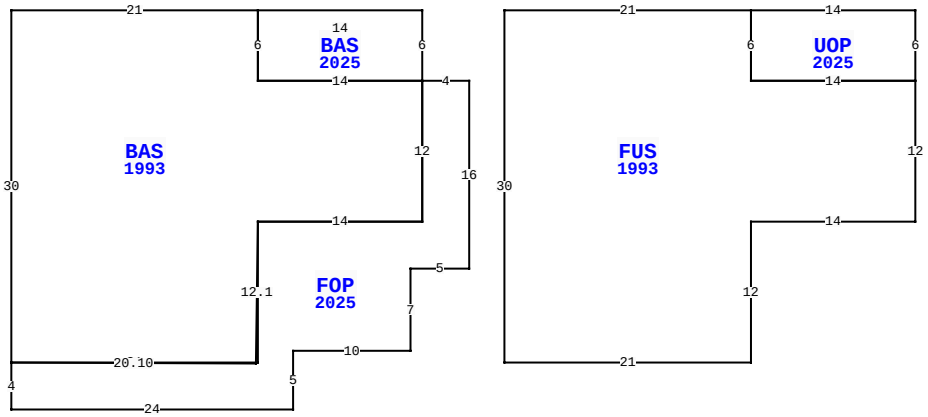

449555 US HWY 301, CALLAHAN

BLD DATE		LGL DATE	
XF DATE		LAND DATE	05/09/2025 DC
INC DATE		AG DATE	

EXTRA FEATURES

LN	OB/XF CODE	DESCRIPTION	BLD	CAP	L	W	UNITS	UT	Adj R	ADJ UNIT PRICE	ORIG COND	YEAR ON	YEAR ACTUAL	Q	% COND	OB/XF MKT VALUE	NOTES
1	0940	SHEDS/PORT	0	0	14	12	168.00	SF	30.00	30.00	100	2025	2024		100	5,040	

VALUATION SUMMARY

VALUATION BY	STANDARD
Tax Group: 1	Tax Dist:
BUILDING MARKET VALUE	179,174
TOTAL MARKET OB/XF VALUE	5,040
TOTAL LAND VALUE - MARKET	91,476
TOTAL MARKET VALUE	275,690
SOH/AGL Deduction	59,468
ASSESSED VALUE	216,222
TOTAL EXEMPTION VALUE	0
BASE TAXABLE VALUE	216,222
TOTAL JUST VALUE	275,690
NCON VALUE	171,661
INCOME VALUE	
PREVIOUS YEAR MKT VALUE	60,805

SFR IS UC (DOWN TO STUDS): COMPLETE REMODEL; NEW R

PERMIT NUM	DESCRIPTION	AMT	ISSUED
4788	COMPLETE RENOVATI		05/28/2024
4641-M	MECHANICAL		06/06/2023
4641-E	ELECTRICAL REMODE		06/02/2023
4641-B	REMODEL		05/30/2023

SALES DATA

OFF RECORD Number	DATE	TYPE INST	Q / U	V / I	RSN CD	SALE PRICE
2782/869	3/12/2025	WD	U	I	11	100
GRANTOR: BENNETT ANNETTE R						
GRANTEE: BENNETT ANNETTE R						
1646/0460	8/16/2009	QC	U	I	11	100
GRANTOR: BENNETT LESLIE D						
GRANTEE: BENNETT ANNETTE R						

BUILDING NOTES

BUILDING DIMENSIONS

BAS=[YR=1993;ORIG=-6,0] W21 S30 E21 N12 E14 N12 W14 N6 $
FUS=[YR=1993;ORIG=15,0] E21 S6 E14 S12 W14 S12 W21 N30 $
PTR=[ORIG=0,0] E15 W15 $
FOP=[YR=2025;ORIG=-27,30] D0.1R20.10 U12.1R0.2 E14 N12 E4 S16 W5 S7 W10 S5 W24 N4 $
BAS=[YR=2025;ORIG=-6,6] E14 N6 W14 S6 $
UOP=[YR=2025;ORIG=36,6] E14 N6 W14 S6 $
.

LAND DESCRIPTION

TOTAL OB/XF 5,040

LN	USE CODE	CLS	LAND USE DESCRIPTION	CAP	RD	LOC ZONE	FRONT	DEPTH	TOT LND UTS	UNIT TYPE	DT	DPTH FACT	% COND	TOT ADJ	UNIT PRICE	ADJ UNIT PRICE	LAND VALUE	OTHER ADJUSTMENTS AND NOTES	YEAR	DENSITY	DECL	FRZ	YR	CONSRV
1	001000	C	COMMERCIAL	0		CG -	C 0.00	0.00	13,068.00	SF		1.00	1.00	1.00	7.00	7.00	91,476							

REVIEW DATE 12/03/2024 BY TW Total Acres: 0.20 Total Land Value: 91,476 Market: 0 Agricultural: 0 Common: 91,476 PRINTED 07/30/2025 BY SYS