PT E1/4 OF SEC 29-2N-24E IN
OR 2480/144

HIGGINBOTHAM DONNA L/E/
612125 RIVER ROAD
CALLAHAN, FL 32011

2025

29-2N-24-0000-0001-0010

NASSAU COUNTY PROPERTY

BUILDING CHARACTERISTICS

ELEMENT	CD	CONSTRUCTION
Exterior Wall	05	AVERAGE 80
Exterior Wall	10	ABOVE AVG 20
Roof Structur	03	GABLE/HIP 100
Roof Cover	03	COMP SHNGL 100
Interior Wall	05	DRYWALL 100
Interior Floo	07	CORK/VTILE 100
Air Condition	03	CENTRAL 100
Heating Type	04	AIR DUCTED 100
Bedrooms		2 100
Bathrooms		1 100
Frame	02	WOOD FRAME 100
Stories	1.	1. 100
Units		0 100
Occupancy	00	NONE 100
Quality	03	Quality Level 03
DOR CODE	0100	SINGLE FAMILY
MAP NUM		MKT AREA 08
NEIGHBORHOOD/LOC	8001.00	

AREA TYPE	TOTAL GROSS AREA	PCT OF BASE	YEAR	TOT ADJ AREA	SUBAREA MARKET VALUE
BAS	768	100	2001	768	74,746
TOTALS	768			768	74,746

MARKET ADJUSTMENTS

TYPE	MDL	EFF. AREA	TOT ADJ PTS	EFF. BASE RATE	REPL. COST NEW	AYB	EYB	ECON	FNCT		NORM	% COND
0100	01	768	109.6000	109.60	84,173	2001	2001	0	0	0	11.20	88.80

1 SINGLE FAM – 100% - 2007 Heated Area: 768 HX Base Yr 2007

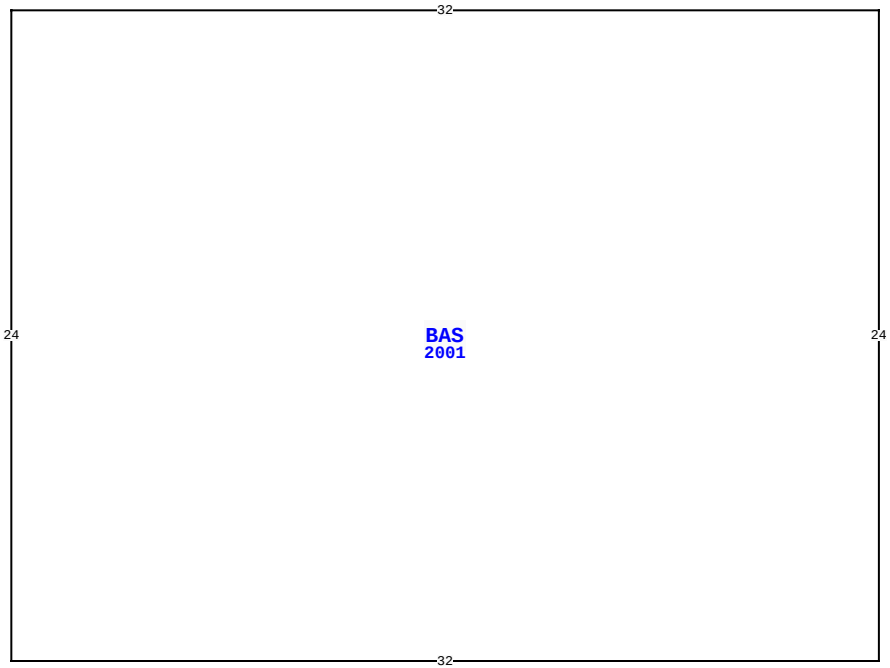

612125 RIVER RD, CALLAHAN

BLD DATE	03/03/2023 NW	LGL DATE	
XF DATE		LAND DATE	05/09/2025 MLU
INC DATE		AG DATE	

VALUATION SUMMARY

VALUATION BY		STANDARD
Tax Group: 6	Tax Dist:	
BUILDING MARKET VALUE		415,968
TOTAL MARKET OB/XF VALUE		7,378
TOTAL LAND VALUE - MARKET		97,500
TOTAL MARKET VALUE		520,846
SOH/AGL Deduction		268,457
ASSESSED VALUE		252,389
TOTAL EXEMPTION VALUE	HX HB WX SX	105,722
BASE TAXABLE VALUE		146,667
TOTAL JUST VALUE		520,846
NCON VALUE		0
INCOME VALUE		
PREVIOUS YEAR MKT VALUE		483,965

PERMIT NUM	DESCRIPTION	AMT	ISSUED
B23183	CO ISSUED	0	12/02/2011
M15678	H/AC	0	10/01/2010
E22772	NEW CONSTR	0	07/01/2010
P14359	NEW CONSTR	0	07/01/2010
R12234	REPAIR/RRF	3,500	01/01/2010
B23183	NEW CONSTR	250,206	01/01/2010

SALES DATA

OFF RECORD Number	DATE	TYPE INST	Q / U	V / I	RSN CD	SALE PRICE
2480/0144	7/16/2021	SW	U	I	11	100
GRANTOR: HIGGINBOTHAM DONNA						
GRANTEE: HIGGINBOTHAM DONNA						
1016/0632	10/29/2001	WD	Q	I	01	100
GRANTOR: WRIGHT W P						
GRANTEE: HIGGINBOTHAM THOMAS						

BUILDING NOTES

BUILDING DIMENSIONS

BAS=[YR=2001] W32 S24 E32 N24$.

EXTRA FEATURES

LN	OB/XF CODE	DESCRIPTION	BLD	CAP	L	W	UNITS	UT	Adj R	ADJ UNIT PRICE	ORIG COND	YEAR ON	YEAR ACTUAL	Q	% COND	OB/XF MKT VALUE	NOTES
1	0200	BARN WD 0-	0	100	50	39	1,950.00	SF	10.00	10.00	100	1985	1985	3	20	3,900	
2	0812	CONCRETE C	0	100	0	0	2,898.00	SF	4.00	4.00	100	1980	1980	3	30	3,478	

LAND DESCRIPTION

TOTAL OB/XF 7,378

LN	USE CODE	CLS	LAND USE DESCRIPTION	CAP	RD	LOC ZONE	FRONT	DEPTH	TOT LND UTS	UNIT TYPE	DT	DPTH FACT	% COND	TOT ADJ	UNIT PRICE	ADJ UNIT PRICE	LAND VALUE	OTHER ADJUSTMENTS AND NOTES	YEAR	DENSITY	DECL	FRZ	YR	CONSRV
1	000100	C	RES	100	0004	OR	0.00	0.00	5.00	AC		1.00	1.00	1.00	19,500.00	19,500.00	97,500							

REVIEW DATE 02/15/2024 BY KBA Total Acres: 5.00 Total Land Value: 97,500 Market: 0 Agricultural: 0 Common: 97,500 PRINTED 07/30/2025 BY SYS

PT E1/4 OF SEC 29-2N-24E IN
OR 2480/144

HIGGINBOTHAM DONNA L/E/
612125 RIVER ROAD
CALLAHAN, FL 32011

2025

29-2N-24-0000-0001-0010

BUILDING CHARACTERISTICS

ELEMENT	CD	CONSTRUCTION
Exterior Wall	17	CB STUCCO 100
Roof Structur	03	GABLE/HIP 100
Roof Cover	03	COMP SHNGL 100
Interior Wall	05	DRYWALL 100
Interior Floo	11	CLAY TILE 50
Interior Floo	12	HARDWOOD 50
Air Condition	03	CENTRAL 100
Heating Type	04	AIR DUCTED 100
Bedrooms		3 100
Bathrooms		3 100
Frame	03	MASONRY 100
Stories	0	0 100
Units		0 100
Occupancy	00	NONE 100
Quality	02	Quality Level 02

DOR CODE 0100 SINGLE FAMILY
MAP NUM | MKT AREA 08
NEIGHBORHOOD/LOC 8001.00

AREA TYPE	TOTAL GROSS AREA	PCT OF BASE	YEAR	TOT ADJ AREA	SUBAREA MARKET VALUE
BAS	2,139	100	2011	2,139	279,537
FGR	561	55	2011	309	40,382
FOP	240	30	2011	72	9,410
UOP	264	20	2011	53	6,927
USP	128	30	2011	38	4,966
TOTALS	3,332			2,611	341,222

MARKET ADJUSTMENTS

TYPE	MDL	EFF. AREA	TOT ADJ PTS	EFF. BASE RATE	REPL. COST NEW	AYB	EYB	ECON	FNCT		NORM	% COND
0900	01	2,611	107.6160	142.05	370,893	1975	2008	0	0	0	8.00	92.00

2 SNGL FAM – 100% - 2007 Heated Area: 2139 HX Base Yr 2007

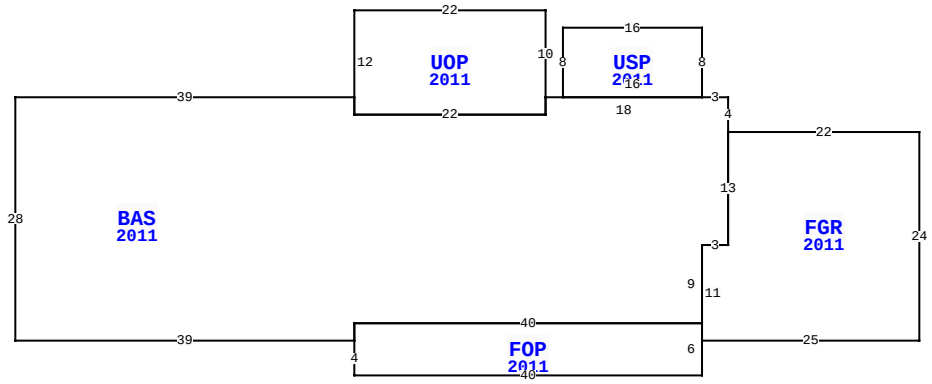

612125 RIVER RD, CALLAHAN

BLD DATE	03/03/2023 NW	LGL DATE	
XF DATE		LAND DATE	05/09/2025 MLU
INC DATE		AG DATE	

NASSAU COUNTY PROPERTY

PAGE 2 of 2 6

VALUATION SUMMARY

VALUATION BY		STANDARD
Tax Group: 6	Tax Dist:	
BUILDING MARKET VALUE		415,968
TOTAL MARKET OB/XF VALUE		7,378
TOTAL LAND VALUE - MARKET		97,500
TOTAL MARKET VALUE		520,846
SOH/AGL Deduction		268,457
ASSESSED VALUE		252,389
TOTAL EXEMPTION VALUE	HX HB WX SX	105,722
BASE TAXABLE VALUE		146,667
TOTAL JUST VALUE		520,846
NCON VALUE		0
INCOME VALUE		
PREVIOUS YEAR MKT VALUE		483,965

PERMIT NUM	DESCRIPTION	AMT	ISSUED
B029657	NEW CONSTR	52,608	05/01/2002
E029633	NEW CONSTR	1,000	05/01/2002
R024100	NEW CONSTR	1,200	05/01/2002

SALES DATA

OFF RECORD Number	DATE	TYPE INST	Q U	V I	RSN CD	SALE PRICE
2480/0144	7/16/2021	SW	U	I	11	100
GRANTOR: HIGGINBOTHAM DONNA						
GRANTEE: HIGGINBOTHAM DONNA						
1016/0632	10/29/2001	WD	Q	I	01	100
GRANTOR: WRIGHT W P						
GRANTEE: HIGGINBOTHAM THOMAS						

BUILDING NOTES

BUILDING DIMENSIONS

FGR=[YR=2011] W22 BAS=[YR=2011] N4 W3 USP=[YR=2011] N8 W16 S8 E16$ W18 UOP=[YR=2011] N10 W22 S12 E22 N2$ S2 W22 N2 W39 S28 E39 FOP=[YR=2011] S4 E40 N6 W40 S2$ N2 E40 N9 E3 N13$ S13 W3 S11 E25 N24$.

EXTRA FEATURES

L N	OB/XF CODE	DESCRIPTION	BLD	CAP	L	W	UNITS	UT	Adj R	ADJ UNIT PRICE	ORIG COND	YEAR ON	YEAR ACTUAL	Q	% COND	OB/XF MKT VALUE	NOTES

LAND DESCRIPTION

TOTAL OB/XF 0

L N	USE CODE	CLS	LAND USE DESCRIPTION	CAP	R D	LOC ZONE	FRONT	DEPTH	TOT LND UTS	UNIT TYPE	D T	DPTH FACT	% COND	TOT ADJ	UNIT PRICE	ADJ UNIT PRICE	LAND VALUE	OTHER ADJUSTMENTS AND NOTES	YEAR	DENSITY	DECL	FRZ	YR	CONSRV

REVIEW DATE 02/15/2024 BY KBA Total Acres: 5.00 Total Land Value: 97,500 Market: 0 Agricultural: 0 Common: 97,500 PRINTED 07/30/2025 BY SYS