SE1/4 OF SE1/4 E1/2 OF
E1/2 OF NE1/4 OF SE1/4
S1/2 OF W1/2 OF NE1/4 OF SE1/4

SMITH BARRY D
P O BOX 369
HILLIARD, FL 32046

2025

28-4N-23-0000-0007-0010

NASSAU COUNTY PROPERTY

BUILDING CHARACTERISTICS

ELEMENT	CD	CONSTRUCTION
Exterior Wall	13	PREFAB PNL 100
Roof Structur	03	GABLE/HIP 100
Roof Cover	12	MODULAR MT 100
Interior Wall	06	CUST PANEL 100
Interior Floo	12	HARDWOOD 90
Interior Floo	11	CLAY TILE 10
Air Condition	03	CENTRAL 100
Heating Type	04	AIR DUCTED 100
Bedrooms		3 100
Bathrooms		2 100
Frame	02	WOOD FRAME 100
Stories	2.	2. 100
Units		0 100
Occupancy	00	NONE 100
Quality	02	Quality Level 02
DOR CODE	5000	IMPROVED AG
MAP NUM		MKT AREA 09
NEIGHBORHOOD/LOC	9001.00	

AREA TYPE	TOTAL GROSS AREA	PCT OF BASE	YEAR	TOT ADJ AREA	SUBAREA MARKET VALUE
BAL	24	15	2008	4	524
BAL	24	15	2008	4	524
BAS	1,500	100	2008	1,500	196,498
FCP	1,000	25	2008	250	32,750
FOP	400	30	2008	120	15,720
FOP	400	30	2008	120	15,720
FUS	927	100	2008	927	121,436
STR	44	10	2008	4	524
TOTALS	4,319			2,929	383,695

MARKET ADJUSTMENTS

TYPE	MDL	EFF. AREA	TOT ADJ PTS	EFF. BASE RATE	REPL. COST NEW	AYB	EYB	ECON	FNCT		NORM	% COND
0900	01	2,929	107.8744	142.39	417,060	2008	2008	0	0	0	8.00	92.00

1 SNGL FAM – 100% - 2016 Heated Area: 2427 HX Base Yr 2016

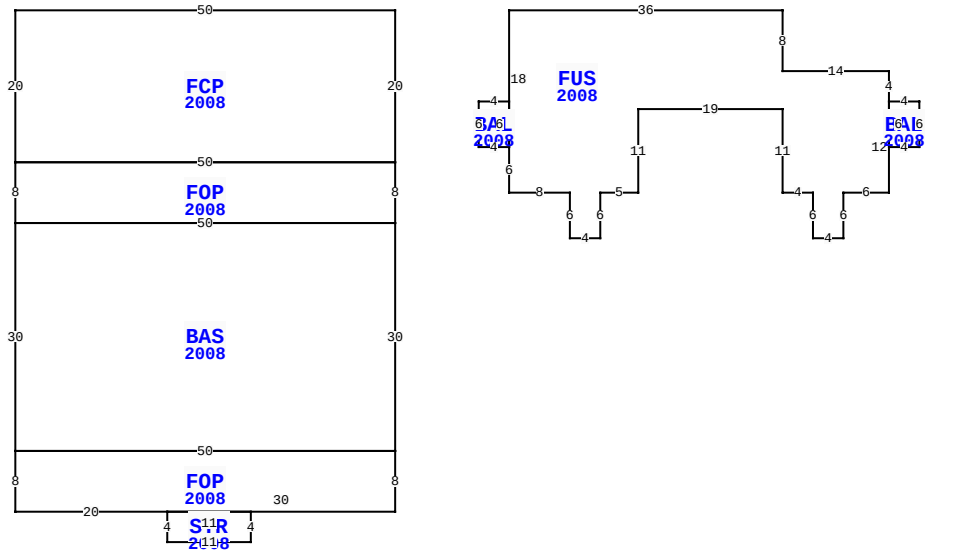

18520 BROKEN ARROW RD, HILLIARD

BLD DATE	03/03/2023 NW	LGL DATE	
XF DATE		LAND DATE	05/21/2025 MLU
INC DATE		AG DATE	03/19/2024 DC

VALUATION SUMMARY

VALUATION BY		STANDARD
Tax Group: 4	Tax Dist:	
BUILDING MARKET VALUE		383,695
TOTAL MARKET OB/XF VALUE		99,751
TOTAL LAND VALUE - MARKET		424,500
TOTAL MARKET VALUE		554,236
SOH/AGL Deduction		274,862
ASSESSED VALUE		279,374
TOTAL EXEMPTION VALUE	HX HB	50,722
BASE TAXABLE VALUE		228,652
TOTAL JUST VALUE		907,946
NCON VALUE		0
INCOME VALUE		
PREVIOUS YEAR MKT VALUE		843,056

PERMIT NUM	DESCRIPTION	AMT	ISSUED
C20567	CO ISSUED	0	09/01/2007
B20567	NEW CONSTR	283,800	09/01/2007
E20024	TEMP POLE	2,000	09/01/2007
M13319	MECH OTHER	0	09/01/2007
P12730	OTHER	0	09/01/2007
R10733	REPAIR/RRF	40,000	09/01/2007

SALES DATA

OFF RECORD Number	DATE	TYPE INST	Q / U	V / I	RSN CD	SALE PRICE
1868/0983	7/17/2013	WD	Q	I	02	335,000
GRANTOR: PRIMESOUTH BANK						
GRANTEE: SMITH BARRY D						
1823/1879	11/13/2012	CT	U	I	18	100
GRANTOR: CLERK OF COURT						
GRANTEE: PRIMESOUTH BANK						

BUILDING NOTES

BUILDING DIMENSIONS

FCP=[YR=2008] W50 S20 FOP=[YR=2008] S8 BAS=[YR=2008] S30 FOP=[YR=2008] S8 E20 STR=[YR=2008] S4 E11 N4 W11$ E30 N8 W50$ E50 N30 W50$ E50 N8 W50$ E50 N20$ PTR=E15 FUS=[YR=2008] E36 S8 E14 S4 BAL=[YR=2008] E4 S6 W4 N6 $ S12 W6 S6 W4 N6 W4 N11 W19 S11 W5 S6 W4 N6 W8 N6 BAL=[YR=2008] N6 W4 S6 E4$ N18$ W15$.

EXTRA FEATURES

LN	OB/XF CODE	DESCRIPTION	BLD	CAP	L	W	UNITS	UT	Adj R	ADJ UNIT PRICE	ORIG COND	YEAR ON	YEAR ACTUAL	Q	% COND	OB/XF MKT VALUE	NOTES
1	0937	WELL	0	100	0	0	2.00	UT	6,000.00	6,000.00	100	1988	1988	3	100	12,000	
2	0936	SEPTC TANK	0	100	0	0	1.00	UT	6,000.00	6,000.00	100	1988	1988	3	100	6,000	
3	0504	FP-ELECTRI	0	100	0	0	1.00	UT	2,000.00	2,000.00	100	2008	2008	3	91	1,820	
4	0681	POLE SHED	0	100	72	46	3,312.00	SF	15.00	15.00	100	2017	2017	3	81	40,241	
5	0200	BARN WD 0-	0	100	50	34	1,700.00	SF	20.00	20.00	100	2017	2017	3	81	27,540	
6	0681	POLE SHED	0	100	50	20	1,000.00	SF	15.00	15.00	100	2017	2017	3	81	12,150	

LAND DESCRIPTION

TOTAL OB/XF 99,751

LN	USE CODE	CLS	LAND USE DESCRIPTION	CAP	RD	LOC ZONE	FRONT	DEPTH	TOT LND UTS	UNIT TYPE	DT	DPTH FACT	% COND	TOT ADJ	UNIT PRICE	ADJ UNIT PRICE	LAND VALUE	OTHER ADJUSTMENTS AND NOTES	YEAR	DENSITY	DECL	FRZ	YR	CONSRV
1	005000	C	AGRICULTURAL	100	0005	OR	0.00	0.00	1.00	AC		1.00	1.00	1.00	45,000.00	45,000.00	45,000							
2	005010	A	SERVICE ACRE	0		OR	0.00	0.00	2.00	AC		1.00	1.00	1.00	500.00	500.00	1,000							
3	006005	A	PASTURE - GR	0		OR	0.00	0.00	67.00	AC		1.00	1.00	1.00	370.00	370.00	24,790							
4	009910	M	MARKET VALUE	0		OR	0.00	0.00	69.00	AC		1.00	1.00	1.00	5,500.00	5,500.00	379,500							

REVIEW DATE 03/19/2024 BY DC Total Acres: 70.00 Total Land Value: 70,790 Market: 379,500 Agricultural: 25,790 Common: 45,000 PRINTED 07/30/2025 BY SYS