PT OF SEC 28-3N-25E
IN OR 2370/847
ESMT IN OR 2416-1985

WILLIAMS CHRISTOPHER R & DIONA R
54439 WILDLIFE WAY
CALLAHAN, FL 32011

2025

28-3N-25-0000-0002-0160

BUILDING CHARACTERISTICS

ELEMENT	CD	CONSTRUCTION
Exterior Wall	06	BD/BATTEN 100
Roof Structur	03	GABLE/HIP 100
Roof Cover	12	MODULAR MT 100
Interior Wall	05	DRYWALL 100
Interior Floo	14	CARPET 60
Interior Floo	11	CLAY TILE 40
Air Condition	03	CENTRAL 100
Heating Type	04	AIR DUCTED 100
Bedrooms		3 100
Bathrooms		3.5 100
Frame	02	WOOD FRAME 100
Stories	2.	2. 100
Units		0 100
Occupancy	00	NONE 100
Quality	03	Quality Level 03
DOR CODE	0100	SINGLE FAMILY
MAP NUM		MKT AREA 05
NEIGHBORHOOD/LOC	5001.00	

AREA TYPE	TOTAL GROSS AREA	PCT OF BASE	YEAR	TOT ADJ AREA	SUBAREA MARKET VALUE
BAS	2,453	100	2021	2,453	380,604
FGR	600	55	2021	330	51,202
FOP	336	30	2021	101	15,671
FOP	456	30	2021	137	21,257
FUS	305	100	2021	305	47,324
STP	20	10	2021	2	310
STP	20	10	2021	2	310
STR	48	10	2021	5	776
TOTALS	4,238			3,335	517,454

MARKET ADJUSTMENTS

TYPE	MDL	EFF. AREA	TOT ADJ PTS	EFF. BASE RATE	REPL. COST NEW	AYB	EYB	ECON	FNCT		NORM	% COND
0500	01	3,335	100.4640	158.73	529,365	2021	2021	0	0	0	2.25	97.75

1 SFR CUST – 100% - 2022 Heated Area: 2758 HX Base Yr 2022

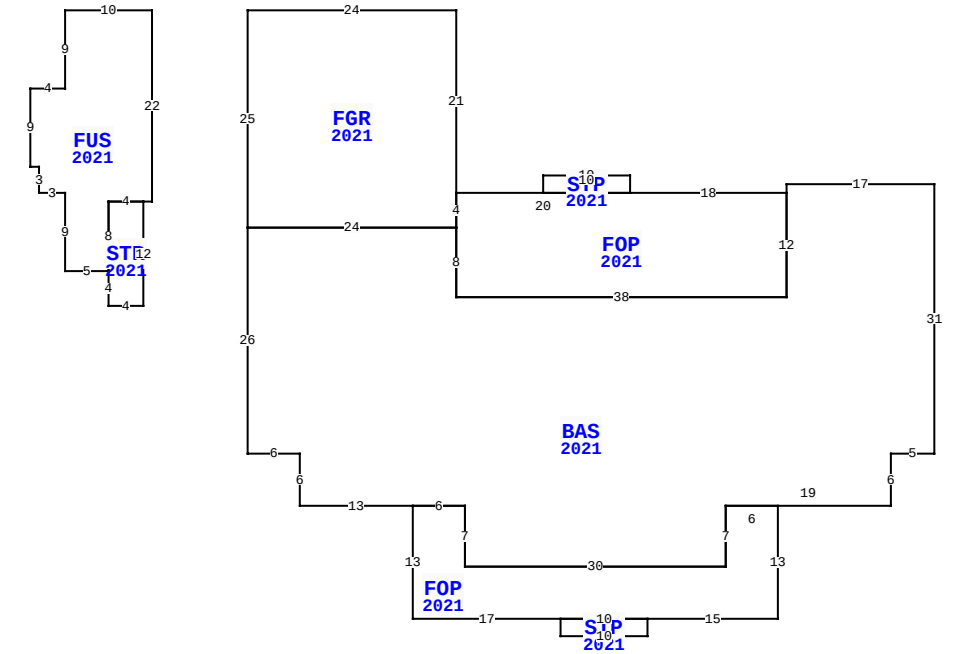

54439 WILDLIFE WAY, CALLAHAN

BLD DATE		LGL DATE	
XF DATE		LAND DATE	05/13/2025 MLU
INC DATE		AG DATE	

NASSAU COUNTY PROPERTY

PAGE 1 of 1 4

VALUATION SUMMARY

VALUATION BY		STANDARD
Tax Group: 4	Tax Dist:	
BUILDING MARKET VALUE		517,454
TOTAL MARKET OB/XF VALUE		3,089
TOTAL LAND VALUE - MARKET		98,475
TOTAL MARKET VALUE		619,018
SOH/AGL Deduction		170,915
ASSESSED VALUE		448,103
TOTAL EXEMPTION VALUE	HX HB	50,722
BASE TAXABLE VALUE		397,381
TOTAL JUST VALUE		619,018
NCON VALUE		0
INCOME VALUE		
PREVIOUS YEAR MKT VALUE		578,934

PERMIT NUM	DESCRIPTION	AMT	ISSUED
21001508	NEW CONSTR	534,500	02/09/2021

SALES DATA

OFF RECORD Number	DATE	TYPE INST	Q / U	V / I	RSN CD	SALE PRICE
2370/0847	6/02/2020	WD	U	V	11	100

GRANTOR: BRIDGES ROBERT D & CH

GRANTEE: WILLIAMS CHRISTOPHE

BUILDING NOTES

EXTRA FEATURES

LN	OB/XF CODE	DESCRIPTION	BLD	CAP	L	W	UNITS	UT	Adj R	ADJ UNIT PRICE	ORIG COND	YEAR ON	YEAR ACTUAL	Q	% COND	OB/XF MKT VALUE	NOTES
1	0810	CONCRETE A	0	100	20	24	480.00	SF	6.50	6.50	100	2024	2021		99	3,089	

BUILDING DIMENSIONS

BAS=[YR=2021;ORIG=0,0] W17 S1 S12 W38 N8 W24 S26 E6 S6 E13 E6 S7 E30 N7 E19 N6 E5 N31 $
FGR=[YR=2021;ORIG=-55,1] N21 W24 S25 E24 N4 $
FOP=[YR=2021;ORIG=-17,1] W18 W20 S4 S8 E38 N12 $
FOP=[YR=2021;ORIG=-60,37] S13 E17 E10 E15 N13 W6 S7 W30 N7 W6 $
FUS=[YR=2021;ORIG=-100,-20] E10 S22 W1 W4 S8 W5 N9 W3 N3 W1 N9 E4 N9 $
STR=[YR=2021;ORIG=-91,2] S12 W4 N4 N8 E4 $
STP=[YR=2021;ORIG=-35,1] N2 W10 S2 E10 $
STP=[YR=2021;ORIG=-43,50] S2 E10 N2 W10 $
PTR=[ORIG=0,0] E20 W20 $

LAND DESCRIPTION

TOTAL OB/XF 3,089

LN	USE CODE	CLS	LAND USE DESCRIPTION	CAP	RD	LOC ZONE	FRONT	DEPTH	TOT LND UTS	UNIT TYPE	DT	DPTH FACT	% COND	TOT ADJ	UNIT PRICE	ADJ UNIT PRICE	LAND VALUE	OTHER ADJUSTMENTS AND NOTES	YEAR	DENSITY	DECL	FRZ	YR	CONSRV
1	000100	C	RES	100		OR	0.00	0.00	5.05	AC		1.00	1.00	1.00	19,500.00	19,500.00	98,475							

REVIEW DATE 02/05/2024 BY KWA Total Acres: 5.05 Total Land Value: 98,475 Market: 0 Agricultural: 0 Common: 98,475 PRINTED 07/30/2025 BY SYS