PT OF LOTS 3 & 4
IN OR 1776/1420
EX R/W IN OR 442/662

COLEMAN JAMES M REV TRUST/COLEMAN JAMES M TRUSTEE
PO BOX 179
CALLAHAN, FL 32011-0179

2025

28-2N-25-3100-0003-0010

BUILDING CHARACTERISTICS

ELEMENT	CD	CONSTRUCTION
Exterior Wall	20	FACE BRICK 100
Roof Structur	03	GABLE/HIP 100
Roof Cover	03	COMP SHNGL 100
Interior Wall	05	DRYWALL 90
Interior Wall	04	PLYWOOD 10
Interior Floo	11	CLAY TILE 100
Air Condition	03	CENTRAL 100
Heating Type	04	AIR DUCTED 100
Bedrooms		3 100
Bathrooms		2 100
Frame	02	WOOD FRAME 100
Stories	1.	1. 100
Units		0 100
BUD8 Adjustme	06	DIST 1D 100
Occupancy	00	NONE 100
Quality	01	Quality Level 01
DOR CODE	5501	TIMBER 2-2 SI 80-89
MAP NUM		MKT AREA 08
NEIGHBORHOOD/LOC	8026.00	

AREA TYPE	TOTAL GROSS AREA	PCT OF BASE	YEAR	TOT ADJ AREA	SUBAREA MARKET VALUE
BAS	2,400	100	1993	2,400	224,563
BAS	440	100	2003	440	41,170
FGR	615	55	1993	338	31,626
FOP	30	30	1993	9	842
FOP	30	30	1993	9	842
UDU	120	55	1993	66	6,175
TOTALS	3,635			3,262	305,218

MARKET ADJUSTMENTS

TYPE	MDL	EFF. AREA	TOT ADJ PTS	EFF. BASE RATE	REPL. COST NEW	AYB	EYB	ECON	FNCT		NORM	% COND
0900	01	3,262	97.7040	128.97	420,700	1974	1985	0	0	0	27.45	72.55

1 SNGL FAM – 0% - 0 Heated Area: 2840 HX Base Yr

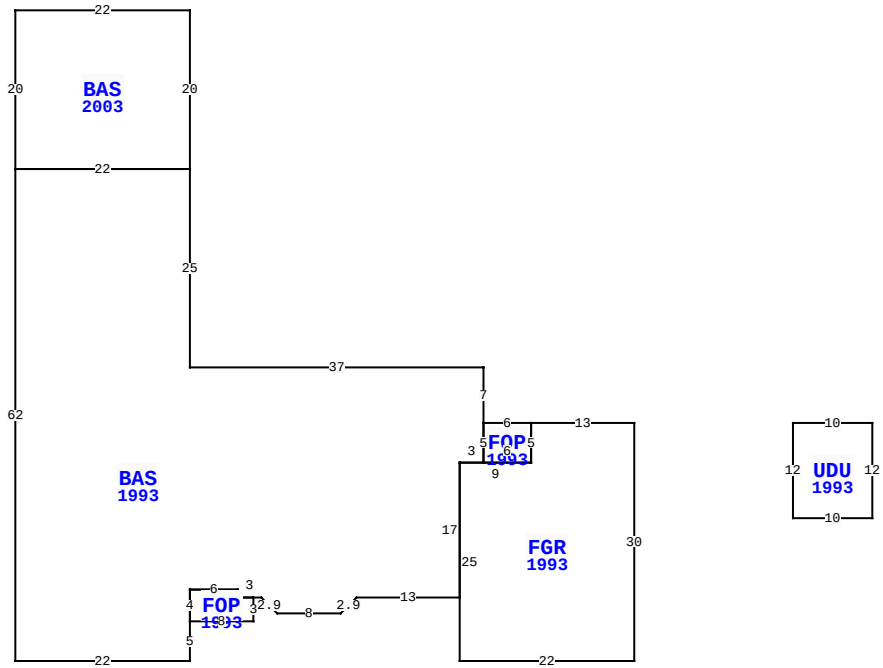

45226 HODGES RD, CALLAHAN

BLD DATE		LGL DATE	
XF DATE		LAND DATE	05/21/2025 MLU
INC DATE		AG DATE	

NASSAU COUNTY PROPERTY

PAGE 1 of 2 6

VALUATION SUMMARY

VALUATION BY	STANDARD
Tax Group: 6	Tax Dist:
BUILDING MARKET VALUE	327,495
TOTAL MARKET OB/XF VALUE	9,843
TOTAL LAND VALUE - MARKET	196,770
TOTAL MARKET VALUE	403,871
SOH/AGL Deduction	72,485
ASSESSED VALUE	331,386
TOTAL EXEMPTION VALUE	0
BASE TAXABLE VALUE	331,386
TOTAL JUST VALUE	534,108
NCON VALUE	0
INCOME VALUE	
PREVIOUS YEAR MKT VALUE	468,320

ADJUST EYB FOR REMODEL

PERMIT NUM	DESCRIPTION	AMT	ISSUED
M6807	H/AC	840	02/01/2003
R4740	REPAIR/RRF	500	01/31/2003
7114	REPAIR/RRF	4,000	03/25/1991

SALES DATA

OFF RECORD Number	DATE	TYPE INST	Q U	V I	RSN CD	SALE PRICE
1776/1420	1/31/2012	WD	U	I	30	100
GRANTOR: COLEMAN JAMES M						
GRANTEE: COLEMAN JAMES M TRU						
0144/0157	1/01/1973	WD	U	V		15,000
GRANTOR:						
GRANTEE:						

BUILDING NOTES

BUILDING DIMENSIONS

FGR=[YR=1993] W13 FOP=[YR=1993] W6 BAS=[YR=1993] N7 W37 N25 BAS=[YR=2003] N20 W22 S20 E22$ W22 S62 E22N5 FOP=[YR=1993] E8 N3 W2 N1 W6 S4$ N4 E6 S1 E3 D2 R2 E8 U2 R2 E13 N17 E3 N5$ S5 E6 N5$ S5 W9 S25 E22 N30$ PTR= E20 UDU=[YR=1993] E10 S12 W10 N12$ W20$.

EXTRA FEATURES

LN	OB/XF CODE	DESCRIPTION	BLD	CAP	L	W	UNITS	UT	Adj R	ADJ UNIT PRICE	ORIG COND	YEAR ON	YEAR ACTUAL	Q	% COND	OB/XF MKT VALUE	NOTES
1	0500	FP-PRE FAB	0	0	0	0	1.00	UT	3,500.00	3,500.00	100	1974	1974	3	32	1,120	
2	0810	CONCRETE A	0	0	0	0	336.00	SF	6.50	6.50	100	1974	1974	3	24	524	
3	0810	CONCRETE A	0	0	0	0	435.00	SF	6.50	6.50	100	1995	1995	3	68	1,923	
4	0810	CONCRETE A	0	0	61	3	183.00	SF	6.50	6.50	100	2006	2006	3	86	1,023	
5	0350	CARPORT WD	0	0	30	20	1,464.00	SF	14.95	14.95	100	2006	2006	3	24	5,253	

LAND DESCRIPTION

TOTAL OB/XF 9,843

LN	USE CODE	CLS	LAND USE DESCRIPTION	CAP	RD	LOC ZONE	FRONT	DEPTH	TOT LND UTS	UNIT TYPE	DT	DPTH FACT	% COND	TOT ADJ	UNIT PRICE	ADJ UNIT PRICE	LAND VALUE	OTHER ADJUSTMENTS AND NOTES	YEAR	DENSITY	DECL	FRZ	YR	CONSRV
1	005000	C	AGRICULTURAL	0		OR	0.00	0.00	1.00	AC		1.00	1.00	1.40	45,000.00	63,000.00	63,000							
2	005501	A	TIMBER 2 P S	0		OR	0.00	0.00	6.86	AC		1.00	1.00	1.00	515.00	515.00	3,533							
3	009910	M	MARKET VALUE	0		OR	0.00	0.00	6.86	AC		1.00	1.00	1.00	19,500.00	19,500.00	133,770							

REVIEW DATE 01/06/2023 BY KWA Total Acres: 7.86 Total Land Value: 66,533 Market: 133,770 Agricultural: 3,533 Common: 63,000 PRINTED 07/30/2025 BY SYS

PT OF LOTS 3 & 4
IN OR 1776/1420
EX R/W IN OR 442/662

COLEMAN JAMES M REV TRUST/COLEMAN JAMES M TRUSTEE
PO BOX 179
CALLAHAN, FL 32011-0179

2025

28-2N-25-3100-0003-0010

NASSAU COUNTY PROPERTY

BUILDING CHARACTERISTICS

ELEMENT	CD	CONSTRUCTION
Exterior Wall	12	CEDAR 100
Roof Structur	03	GABLE/HIP 100
Roof Cover	01	MINIMUM 100
Interior Wall	06	CUST PANEL 100
Interior Floo	03	CONC FINSH 100
Air Condition	03	CENTRAL 100
Heating Type	01	NONE 100
Bedrooms		0 100
Bathrooms		0 100
Frame	02	WOOD FRAME 100
Stories	1.	1. 100
Units		0 100
Occupancy	00	NONE 100
Quality	06	Quality Level 06

DOR CODE 5501 TIMBER 2-2 SI 80-89
MAP NUM
MKT AREA 08
NEIGHBORHOOD/LOC 8026.00

AREA TYPE	TOTAL GROSS AREA	PCT OF BASE	YEAR	TOT ADJ AREA	SUBAREA MARKET VALUE
BAS	200	100	2007	200	6,552
BAS	400	100	2007	400	13,104
UCP	400	20	2007	80	2,621
TOTALS	1,000			680	22,277

MARKET ADJUSTMENTS

TYPE	MDL	EFF. AREA	TOT ADJ PTS	EFF. BASE RATE	REPL. COST NEW	AYB	EYB	ECON	FNCT		NORM	% COND
6500	01	680	126.5000	46.80	31,824	1980	2004	0	0	0	30.00	70.00

2 GARAGE RES – 0% - 0 Heated Area: 600 HX Base Yr

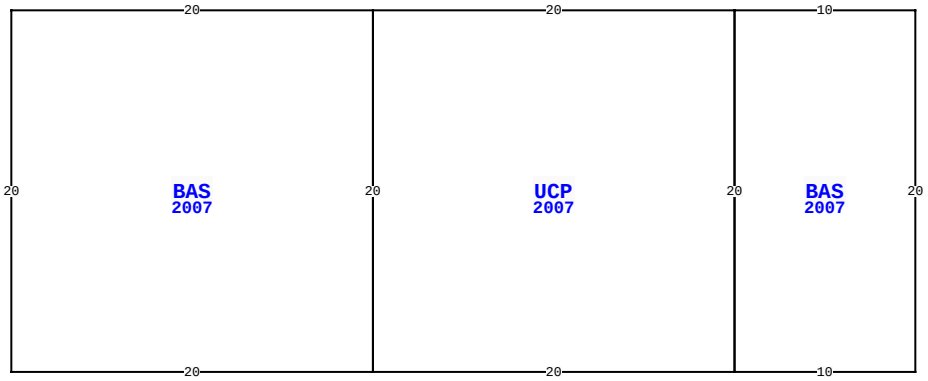

45226 HODGES RD, CALLAHAN

BLD DATE		LGL DATE	
XF DATE		LAND DATE	05/21/2025 MLU
INC DATE		AG DATE	

VALUATION SUMMARY

VALUATION BY	STANDARD
Tax Group: 6	Tax Dist:
BUILDING MARKET VALUE	327,495
TOTAL MARKET OB/XF VALUE	9,843
TOTAL LAND VALUE - MARKET	196,770
TOTAL MARKET VALUE	403,871
SOH/AGL Deduction	72,485
ASSESSED VALUE	331,386
TOTAL EXEMPTION VALUE	0
BASE TAXABLE VALUE	331,386
TOTAL JUST VALUE	534,108
NCON VALUE	0
INCOME VALUE	
PREVIOUS YEAR MKT VALUE	468,320

PERMIT NUM	DESCRIPTION	AMT	ISSUED

SALES DATA

OFF RECORD Number	DATE	TYPE INST	Q U /	V I /	RSN CD	SALE PRICE
1776/1420	1/31/2012	WD	U	I	30	100
GRANTOR: COLEMAN JAMES M						
GRANTEE: COLEMAN JAMES M TRU						
0144/0157	1/01/1973	WD	U	V		15,000
GRANTOR:						
GRANTEE:						

BUILDING NOTES

BUILDING DIMENSIONS

BAS=[YR=2007] W10 UCP=[YR=2007] W20 BAS=[YR=2007] W20 S20 E20 N20$ S20 E20 N20$ S20 E10 N20$.

EXTRA FEATURES

L N	OB/XF CODE	DESCRIPTION	BLD	CAP	L	W	UNITS	UT	Adj R	ADJ UNIT PRICE	ORIG COND	YEAR ON	YEAR ACTUAL	Q	% COND	OB/XF MKT VALUE	NOTES

LAND DESCRIPTION

TOTAL OB/XF 0

L N	USE CODE	CLS	LAND USE DESCRIPTION	CAP	R D	LOC ZONE	FRONT	DEPTH	TOT LND UTS	UNIT TYPE	D T	DPTH FACT	% COND	TOT ADJ	UNIT PRICE	ADJ UNIT PRICE	LAND VALUE	OTHER ADJUSTMENTS AND NOTES	YEAR	DENSITY	DECL	FRZ	YR	CONSRV

REVIEW DATE 01/06/2023 BY KWA Total Acres: 7.86 Total Land Value: 66,533 Market: 133,770 Agricultural: 3,533 Common: 63,000 PRINTED 07/30/2025 BY SYS