PT OF LOTS 10 & 27
IN OR 594/537
EX ESMT IN OR 634/455

BOMGARDNER TIMOTHY W
PO BOX 1146
CALLAHAN, FL 32011-1146

2025

28-2N-25-3060-0010-0080

BUILDING CHARACTERISTICS

ELEMENT	CD	CONSTRUCTION
Exterior Wall	23	REINF CONC 100
Roof Structur	03	GABLE/HIP 100
Roof Cover	12	MODULAR MT 100
Interior Wall	05	DRYWALL 100
Interior Floo	11	CLAY TILE 90
Interior Floo	03	CONC FINSH 10
Air Condition	03	CENTRAL 100
Heating Type	04	AIR DUCTED 100
Bedrooms		3 100
Bathrooms		2.5 100
Frame	04	REIN CONC 100
Stories	1.	1. 100
Units		0 100
Occupancy	00	NONE 100
Quality	03	Quality Level 03
DOR CODE	0100	SINGLE FAMILY
MAP NUM		MKT AREA 08
NEIGHBORHOOD/LOC	8026.00	

AREA TYPE	TOTAL GROSS AREA	PCT OF BASE	YEAR	TOT ADJ AREA	SUBAREA MARKET VALUE
BAS	2,631	100	2013	2,631	380,751
FGR	576	55	2013	317	45,875
FOP	80	30	2013	24	3,473
FOP	168	30	2013	50	7,236
FOP	300	30	2013	90	13,025
TOTALS	3,755			3,112	450,361

MARKET ADJUSTMENTS

TYPE	MDL	EFF. AREA	TOT ADJ PTS	EFF. BASE RATE	REPL. COST NEW	AYB	EYB	ECON	FNCT		NORM	% COND
0900	01	3,112	116.0120	153.14	476,572	2013	2013	0	0	0	5.50	94.50

2 SNGL FAM – 100% - 0 Heated Area: 2631 HX Base Yr

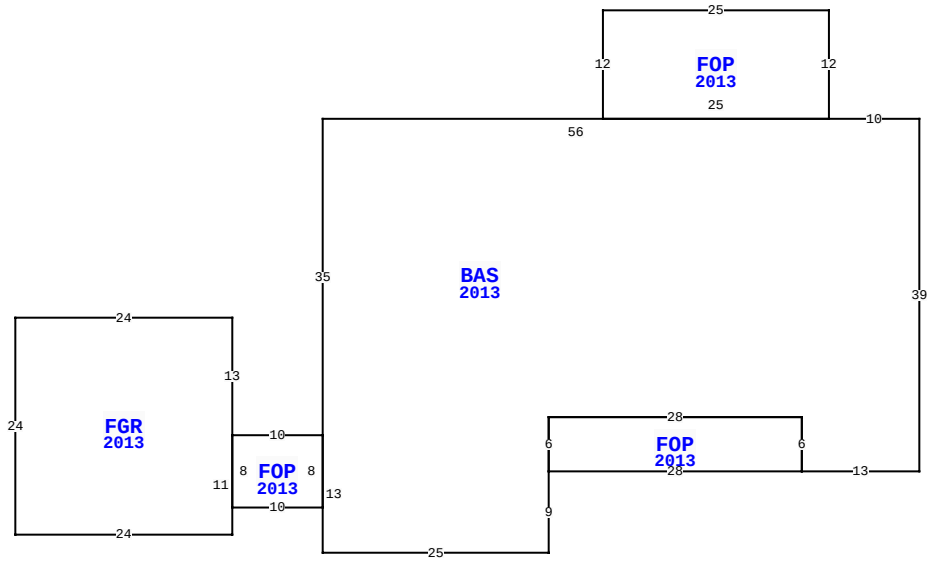

BLD DATE	03/03/2023 NW	LGL DATE	
XF DATE		LAND DATE	05/21/2025 MLU
INC DATE		AG DATE	

45218 BISMARK RD, CALLAHAN

NASSAU COUNTY PROPERTY

PAGE 1 of 1 6

VALUATION SUMMARY

VALUATION BY		STANDARD
Tax Group: 6	Tax Dist:	
BUILDING MARKET VALUE		450,361
TOTAL MARKET OB/XF VALUE		0
TOTAL LAND VALUE - MARKET		72,450
TOTAL MARKET VALUE		522,811
SOH/AGL Deduction		289,098
ASSESSED VALUE		233,713
TOTAL EXEMPTION VALUE	HX HB	50,722
BASE TAXABLE VALUE		182,991
TOTAL JUST VALUE		522,811
NCON VALUE		0
INCOME VALUE		
PREVIOUS YEAR MKT VALUE		485,087

WOOD SHED NO VALUE

PERMIT NUM	DESCRIPTION	AMT	ISSUED
B1226523	CO ISSUED	0	04/23/2013
E25694	NEW CONSTR	0	12/01/2012
M1217790	H/AC	0	12/01/2012
M17790	H/AC	0	12/01/2012
P1216206	NEW CONSTR	0	11/01/2012
B1226523	NEW CONSTR	305,608	10/01/2012

SALES DATA

OFF RECORD Number	DATE	TYPE INST	Q U	V I	RSN CD	SALE PRICE
0594/0537	4/04/1990	WD	Q	I		45,000
GRANTOR: CODY JAMES P						
GRANTEE: BOMGARDNER TIMOTHY						
0537/0441	2/22/1988	WD	Q	I		44,000
GRANTOR: O'NEAL VIRGINIA						
GRANTEE: CODY JAMES P						

BUILDING NOTES

BUILDING DIMENSIONS

BAS=[YR=2013] W10 FOP=[YR=2013] N12 W25 S12 E25$ W56 S35 FOP=[YR=2013] W10 FGR=[YR=2013] N13 W24 S24 E24 N11$ S8 E10 N8$ S13 E25 N9 FOP=[YR=2013] E28 N6 W28 S6$ N6 E28 S6 E13 N39$.

EXTRA FEATURES

LN	OB/XF CODE	DESCRIPTION	BLD	CAP	L	W	UNITS	UT	Adj R	ADJ UNIT PRICE	ORIG COND	YEAR ON	YEAR ACTUAL	Q	% COND	OB/XF MKT VALUE	NOTES

LAND DESCRIPTION

TOTAL OB/XF 0

LN	USE CODE	CLS	LAND USE DESCRIPTION	CAP	RD	LOC ZONE	FRONT	DEPTH	TOT LND UTS	UNIT TYPE	DT	DPTH FACT	% COND	TOT ADJ	UNIT PRICE	ADJ UNIT PRICE	LAND VALUE	OTHER ADJUSTMENTS AND NOTES	YEAR	DENSITY	DECL	FRZ	YR	CONSRV
1	000100	C	RES	100		OR	0.00	0.00	1.61	AC		1.00	1.00	1.00	45,000.00	45,000.00	72,450							

REVIEW DATE 01/06/2023 BY KWA Total Acres: 1.61 Total Land Value: 72,450 Market: 0 Agricultural: 0 Common: 72,450 PRINTED 07/30/2025 BY SYS