PT GOVT LOT 3 IN OR 537/1006 &
PT SE1/4 OF SE1/4 EX 3-1 & 3-2
IN OR 259 PG 228

MCKAY MICHAEL J & SANDRA M
19426 SCENIC RIVER DRIVE
HILLIARD, FL 32046

2025

28-2N-23-0000-0003-0000

NASSAU COUNTY PROPERTY

BUILDING CHARACTERISTICS

ELEMENT	CD	CONSTRUCTION
Exterior Wall	12	CEDAR 100
Roof Structur	03	GABLE/HIP 100
Roof Cover	03	COMP SHNGL 100
Interior Wall	04	PLYWOOD 50
Interior Wall	05	DRYWALL 50
Interior Floo	14	CARPET 70
Interior Floo	13	LVT/LAMNT 30
Air Condition	03	CENTRAL 100
Heating Type	04	AIR DUCTED 100
Bedrooms		3 100
Bathrooms		2.5 100
Frame	02	WOOD FRAME 100
Stories	2.	2. 100
Units		0 100
BUD8 Adjustme	06	DIST 1D 100
Occupancy	00	NONE 100
Quality	01	Quality Level 01

DOR CODE	5000	IMPROVED AG	
MAP NUM		MKT AREA	09
NEIGHBORHOOD/LOC	9001.00		

AREA TYPE	TOTAL GROSS AREA	PCT OF BASE	YEAR	TOT ADJ AREA	SUBAREA MARKET VALUE
BAS	1,025	100	1993	1,025	100,698
FGR	528	55	1993	290	28,490
FSP	492	40	1993	197	19,354
FSP	246	40	2019	98	9,628
FUS	1,025	100	1993	1,025	100,698
TOTALS	3,316			2,635	258,866

MARKET ADJUSTMENTS

TYPE	MDL	EFF. AREA	TOT ADJ PTS	EFF. BASE RATE	REPL. COST NEW	AYB	EYB	ECON	FNCT		NORM	% COND
0900	01	2,635	97.2864	128.42	338,387	1977	1977	0	0	0	23.50	76.50

1 SNGL FAM – 100% - 0 Heated Area: 2050 HX Base Yr

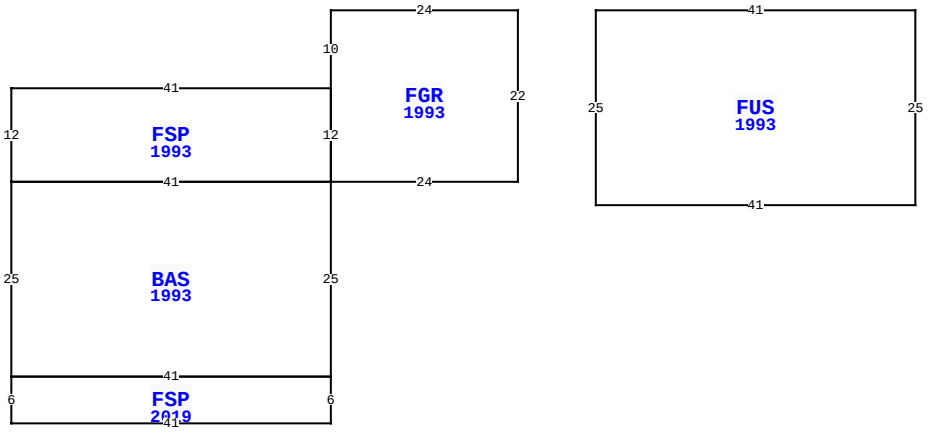

19426 SCENIC RIVER DR, HILLIARD

BLD DATE		LGL DATE	
XF DATE		LAND DATE	05/09/2025 MLU
INC DATE		AG DATE	11/04/2024 KBA

NASSAU COUNTY PROPERTY — VALUATION SUMMARY

VALUATION BY		STANDARD
Tax Group: 6	Tax Dist:	
BUILDING MARKET VALUE		258,866
TOTAL MARKET OB/XF VALUE		36,859
TOTAL LAND VALUE - MARKET		391,500
TOTAL MARKET VALUE		392,832
SOH/AGL Deduction		218,251
ASSESSED VALUE		174,581
TOTAL EXEMPTION VALUE	HX HB	50,722
BASE TAXABLE VALUE		123,859
TOTAL JUST VALUE		687,225
NCON VALUE		0
INCOME VALUE		
PREVIOUS YEAR MKT VALUE		645,780

PERMIT NUM	DESCRIPTION	AMT	ISSUED
230013651	REPLACE SIDING	57,399	10/24/2023
230005493	ROOF	2,750	04/27/2023
230005478	ROOF	15,355	04/27/2023
MH951013	MH MOVE-ON	0	08/01/1995
7172	MH MOVE-ON	10,000	03/09/1988

SALES DATA

OFF RECORD Number	DATE	TYPE INST	Q U	V I	RSN CD	SALE PRICE
0537/1006	2/29/1988	WD	U	V	08	5,000
GRANTOR: ROWELL JOHNNY H						
GRANTEE: MCKAY MICHAEL J						
0226/0086	1/01/1976	WD	Q	V		40,000
GRANTOR:						
GRANTEE:						

BUILDING NOTES

BUILDING DIMENSIONS

FGR=[YR=1993] W24 S10 FSP=[YR=1993] W41 S12 BAS=[YR=1993] S25 FSP=[YR=2019] S6 E41 N6 W41$ E41 N25 W41$ E41 N12$ S12 E24 N22$ PTR= E10 FUS=[YR=1993] E41 S25 W41 N25$W10$.

EXTRA FEATURES

LN	OB/XF CODE	DESCRIPTION	BLD	CAP	L	W	UNITS	UT	Adj R	ADJ UNIT PRICE	ORIG COND	YEAR ON	YEAR ACTUAL	Q	% COND	OB/XF MKT VALUE	NOTES
1	0681	POLE SHED	0	100	50	27	1,350.00	SF	15.00	15.00	100	1981	1981	3	20	4,050	
2	0861	POOL GUNIT	0	100	16	34	544.00	SF	85.00	85.00	100	1982	1982	3	20	9,248	
3	0845	KOOL DECK	0	100	0	0	504.00	SF	7.25	7.25	100	1982	1982	3	35	1,279	
4	0812	CONCRETE C	0	100	0	0	1,230.00	SF	4.00	4.00	100	1980	1980	3	30	1,476	
5	0910	SCRN RM L	0	100	40	22	880.00	SF	15.00	15.00	100	2000	2000	3	20	2,640	
6	0937	WELL	0	100	0	0	1.00	UT	6,000.00	6,000.00	100	2000	2000	3	100	6,000	
7	0936	SEPTC TANK	0	100	0	0	1.00	UT	6,000.00	6,000.00	100	2000	2000	3	100	6,000	
8	1242	WD DECK A	0	100	8	8	64.00	SF	7.50	7.50	100	2000	2000	3	20	96	
9	0752	USP	0	100	14	8	112.00	SF	15.00	15.00	100	2000	2000	3	27	454	
10	0940	SHEDS/PORT	0	100	24	12	288.00	SF	30.00	30.00	100	2024	2015		65	5,616	

TOTAL OB/XF 36,859

LAND DESCRIPTION

LN	USE CODE	CLS	LAND USE DESCRIPTION	CAP	RD	LOC ZONE	FRONT	DEPTH	TOT LND UTS	UNIT TYPE	DT	DPTH FACT	% COND	TOT ADJ	UNIT PRICE	ADJ UNIT PRICE	LAND VALUE	OTHER ADJUSTMENTS AND NOTES	YEAR	DENSITY	DECL	FRZ	YR	CONSRV
1	005000	C	AGRICULTURAL	100	0005	OR	0.00	0.00	2.37	AC		1.00	1.00	1.00	35,000.00	35,000.00	82,950							
2	005600	A	TIMBER 3 N S	0		OR	0.00	0.00	36.30	AC		1.00	1.00	1.00	390.00	390.00	14,157							
3	009910	M	MARKET VALUE	0		OR	0.00	0.00	36.30	AC		1.00	1.00	1.00	8,500.00	8,500.00	308,550							

REVIEW DATE 01/04/2024 BY WWX Total Acres: 38.67 Total Land Value: 97,107 Market: 308,550 Agricultural: 14,157 Common: 82,950 PRINTED 07/30/2025 BY SYS