LOT 48
IN OR 2150/758
SHELL COVE PBK 8/150

KEITH SEAN & JOY
2207 SHELL COVER CIRCLE
FERNANDINA BEACH, FL 32034

2025

27-3N-28-1192-0048-0000

BUILDING CHARACTERISTICS

ELEMENT	CD	CONSTRUCTION
Exterior Wall	10	ABOVE AVG 90
Exterior Wall	14	WD SHINGLE 10
Roof Structur	03	GABLE/HIP 100
Roof Cover	03	COMP SHNGL 100
Interior Wall	05	DRYWALL 100
Interior Floo	11	CLAY TILE 50
Interior Floo	14	CARPET 50
Air Condition	03	CENTRAL 100
Heating Type	04	AIR DUCTED 100
Bedrooms		3 100
Bathrooms		2.5 100
Frame	02	WOOD FRAME 100
Stories	2.	2. 100
Units		0 100
Occupancy	00	NONE 100
Quality	05	Quality Level 05
DOR CODE	0100	SINGLE FAMILY
MAP NUM		MKT AREA 01
NEIGHBORHOOD/LOC	1011.500	

AREA TYPE	TOTAL GROSS AREA	PCT OF BASE	YEAR	TOT ADJ AREA	SUBAREA MARKET VALUE
BAS	1,359	100	2017	1,359	261,665
FGR	276	55	2017	152	29,266
FOP	102	30	2017	31	5,969
FOP	110	30	2017	33	6,354
FUS	627	100	2017	627	120,724
STR	60	10	2017	6	1,156
TOTALS	2,534			2,208	425,134

MARKET ADJUSTMENTS

TYPE	MDL	EFF. AREA	TOT ADJ PTS	EFF. BASE RATE	REPL. COST NEW	AYB	EYB	ECON	FNCT		NORM	% COND
0500	01	2,208	125.6948	198.60	438,509	2017	2017	0	0	0	3.05	96.95

1 SFR CUST – 100% - 2018 Heated Area: 1986 HX Base Yr 2018

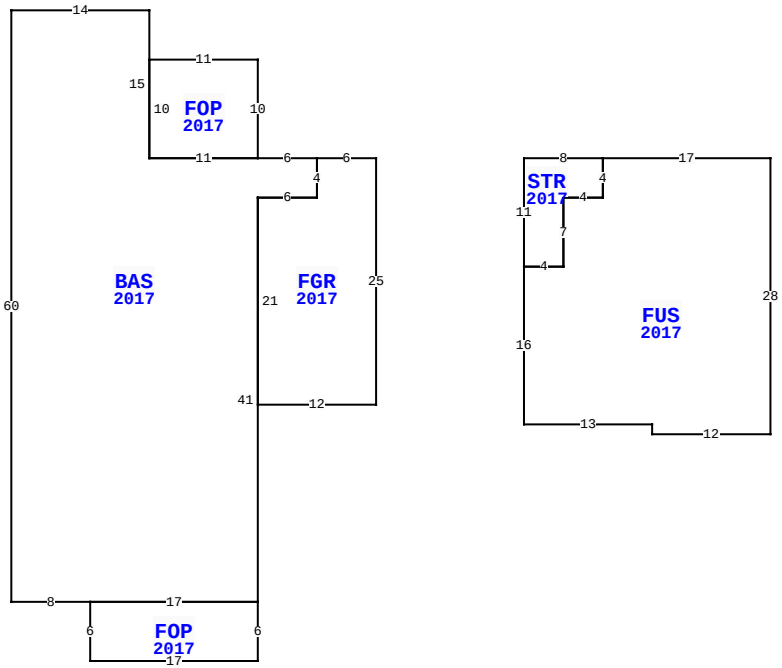

2207 SHELL COVE CR, FERNANDINA BEACH

BLD DATE		LGL DATE	
XF DATE		LAND DATE	04/10/2025 MLU
INC DATE		AG DATE	

NASSAU COUNTY PROPERTY

PAGE 1 of 1 2

VALUATION SUMMARY

VALUATION BY		STANDARD
Tax Group: 2	Tax Dist:	
BUILDING MARKET VALUE		425,134
TOTAL MARKET OB/XF VALUE		3,494
TOTAL LAND VALUE - MARKET		150,000
TOTAL MARKET VALUE		578,628
SOH/AGL Deduction		258,274
ASSESSED VALUE		320,354
TOTAL EXEMPTION VALUE	HX HB	50,722
BASE TAXABLE VALUE		269,632
TOTAL JUST VALUE		578,628
NCON VALUE		0
INCOME VALUE		
PREVIOUS YEAR MKT VALUE		549,211

PERMIT NUM	DESCRIPTION	AMT	ISSUED
20170982	NEW CONSTR	237,734	04/03/2017

SALES DATA

OFF RECORD Number	DATE	TYPE INST	Q U	V I	RSN CD	SALE PRICE
2150/0758	9/25/2017	SW	Q	I	02	350,800
GRANTOR: ARTISAN HOMES LLC						
GRANTEE: KEITH SEAN & JOY (H						
2041/1619	4/20/2016	SW	Q	V	05	548,000
GRANTOR: ROBINSON CREEK 34 LLC						
GRANTEE: ARTISAN HOMES LLC						

BUILDING NOTES

BUILDING DIMENSIONS

FGR=[YR=2017] W6 BAS=[YR=2017] W6 FOP=[YR=2017] N10 W11 S10 E11$ W11 N15 W14 S60 E8 FOP=[YR=2017] S6 E17 N6 W17$ E17 N41 E6 N4$ S4 W6 S21 E12 N25$ PTR=E15 STR=[YR=2017] E8 FUS=[YR=2017] E17 S28 W12 N1 W13 N16 E4 N7 E4 N4$ S4 W4 S7 W4 N11$ W15$.

EXTRA FEATURES

LN	OB/XF CODE	DESCRIPTION	BLD	CAP	L	W	UNITS	UT	Adj R	ADJ UNIT PRICE	ORIG COND	YEAR ON	YEAR ACTUAL	Q	% COND	OB/XF MKT VALUE	NOTES
1	0855	CONC PAVER	0	100	0	0	520.00	SF	7.00	7.00	100	2017	2017	3	96	3,494	

LAND DESCRIPTION

TOTAL OB/XF 3,494

LN	USE CODE	CLS	LAND USE DESCRIPTION	CAP	RD	LOC ZONE	FRONT	DEPTH	TOT LND UTS	UNIT TYPE	DT	DPTH FACT	% COND	TOT ADJ	UNIT PRICE	ADJ UNIT PRICE	LAND VALUE	OTHER ADJUSTMENTS AND NOTES	YEAR	DENSITY	DECL	FRZ	YR	CONSRV
1	000100	C	RES	100		R-2	0.00	0.00	1.00	LT		1.00	1.00	1.00	150,000.00	150,000.00	150,000							

REVIEW DATE 03/13/2024 BY KBA Total Acres: 0.00 Total Land Value: 150,000 Market: 0 Agricultural: 0 Common: 150,000 PRINTED 07/30/2025 BY SYS