PT S1/2 OF NW1/4 & PT OF
N1/2 OF SW1/4 OF SEC 27-3N-25E
IN OR 1949/958, OR 1936/976,

DOE JOHN/
55051 COUNTREE LIFE WAY
CALLAHAN, FL 32011

2025

27-3N-25-0000-0003-0060

NASSAU COUNTY PROPERTY

BUILDING CHARACTERISTICS

ELEMENT	CD	CONSTRUCTION
Exterior Wall	20	FACE BRICK 100
Roof Structur	03	GABLE/HIP 100
Roof Cover	03	COMP SHNGL 100
Interior Wall	05	DRYWALL 100
Interior Floo	14	CARPET 60
Interior Floo	08	SHT VINYL 40
Air Condition	03	CENTRAL 100
Heating Type	04	AIR DUCTED 100
Bedrooms		3 100
Bathrooms		2 100
Frame	02	WOOD FRAME 100
Stories	1.	1. 100
Units		0 100
Occupancy	00	NONE 100
Quality	03	Quality Level 03
DOR CODE	0100	SINGLE FAMILY
MAP NUM		MKT AREA 05
NEIGHBORHOOD/LOC	5001.00	

AREA TYPE	TOTAL GROSS AREA	PCT OF BASE	YEAR	TOT ADJ AREA	SUBAREA MARKET VALUE
BAS	2,070	100	2015	2,070	267,188
FGR	485	55	2015	267	34,463
FOP	175	30	2015	52	6,712
PTO	112	5	2015	6	775
TOTALS	2,842			2,395	309,139

MARKET ADJUSTMENTS

TYPE	MDL	EFF. AREA	TOT ADJ PTS	EFF. BASE RATE	REPL. COST NEW	AYB	EYB	ECON	FNCT		NORM	% COND
0900	01	2,395	104.8600	138.42	331,516	2015	2015	0	0	0	6.75	93.25

1 SNGL FAM – 100% - 2019 Heated Area: 2070 HX Base Yr 2019

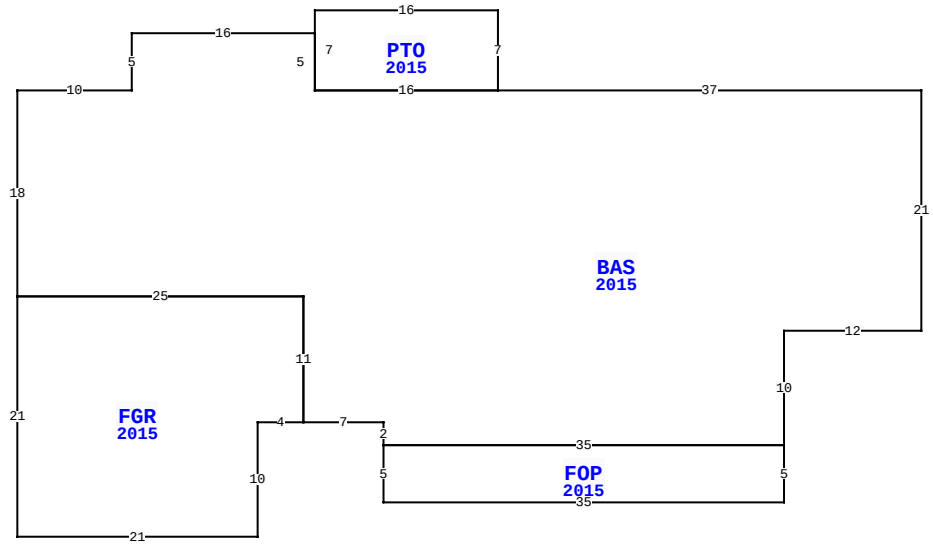

55051 COUNTREE LIFE WAY, CALLAHAN

BLD DATE		LGL DATE	
XF DATE		LAND DATE	05/13/2025 MLU
INC DATE		AG DATE	

VALUATION SUMMARY

VALUATION BY		STANDARD
Tax Group: 4	Tax Dist:	
BUILDING MARKET VALUE		309,139
TOTAL MARKET OB/XF VALUE		12,961
TOTAL LAND VALUE - MARKET		285,430
TOTAL MARKET VALUE		607,530
SOH/AGL Deduction		243,064
ASSESSED VALUE		364,466
TOTAL EXEMPTION VALUE	HX HB	50,722
BASE TAXABLE VALUE		313,744
TOTAL JUST VALUE		607,530
NCON VALUE		0
INCOME VALUE		
PREVIOUS YEAR MKT VALUE		699,152

PERMIT NUM	DESCRIPTION	AMT	ISSUED
B1429672	CO ISSUED	0	03/23/2015
B1429672	NEW CONSTR	256,080	12/01/2014

SALES DATA

OFF RECORD Number	DATE	TYPE INST	Q U /	V I /	RSN CD	SALE PRICE
9999/9999	9/21/2018	CN	U	V	37	265,000
GRANTOR: HOLTON JOHN CHRISTOPH						
GRANTEE: DOE JOHN						
9999/9999	2/09/2018	CN	Q	I	01	415,000
GRANTOR: PASHLEY LEE D & WHITN						
GRANTEE: DOE JOHN						

BUILDING NOTES

BUILDING DIMENSIONS

BAS=[YR=2015] W37 PTO=[YR=2015] N7 W16 S7 E16$ W16 N5 W16 S5 W10 S18 FGR=[YR=2015] S21 E21 N10 E4 N11 W25 $ E25 S11 E7 S2 FOP=[YR=2015] S5 E35 N5 W35$ E35 N10 E12 N21$.

EXTRA FEATURES

LN	OB/XF CODE	DESCRIPTION	BLD	CAP	L	W	UNITS	UT	Adj R	ADJ UNIT PRICE	ORIG COND	YEAR ON	YEAR ACTUAL	Q	% COND	OB/XF MKT VALUE	NOTES
1	0810	CONCRETE A	0	100	0	0	520.00	SF	6.50	6.50	100	2015	2015	3	95	3,211	
2	0504	FP-ELECTRI	0	100	0	0	1.00	UT	2,000.00	2,000.00	100	2015	2015	3	96	1,920	
3	0680	POLE SHED	0	100	30	30	900.00	SF	10.00	10.00	100	2024	2019		87	7,830	

LAND DESCRIPTION

TOTAL OB/XF 12,961

LN	USE CODE	CLS	LAND USE DESCRIPTION	CAP	RD	LOC ZONE	FRONT	DEPTH	TOT LND UTS	UNIT TYPE	DT	DPTH FACT	% COND	TOT ADJ	UNIT PRICE	ADJ UNIT PRICE	LAND VALUE	OTHER ADJUSTMENTS AND NOTES	YEAR	DENSITY	DECL	FRZ	YR	CONSRV
1	000100	C	RES	100		OR	0.00	0.00	33.58	AC		1.00	1.00	1.00	8,500.00	8,500.00	285,430							

REVIEW DATE 10/30/2024 BY TWA Total Acres: 33.58 Total Land Value: 285,430 Market: 0 Agricultural: 0 Common: 285,430 PRINTED 07/30/2025 BY SYS