BLOCK 3 LOT 15
NASSAU LAKES 1B REPLAT PB6/175

VAZQUEZ JOSE M & KELSEY I
96147 CAYMAN CIR
FERNANDINA BEACH, FL 32034

2025

27-2N-28-141B-0003-0150

NASSAU COUNTY PROPERTY

BUILDING CHARACTERISTICS

ELEMENT	CD	CONSTRUCTION
Exterior Wall	31	HARDIE BRD 100
Roof Structur	08	IRREGULAR 100
Roof Cover	03	COMP SHNGL 100
Interior Wall	05	DRYWALL 100
Interior Floo	13	LVT/LAMNT 90
Interior Floo	11	CLAY TILE 10
Air Condition	03	CENTRAL 100
Heating Type	04	AIR DUCTED 100
Bedrooms		4 100
Bathrooms		3 100
Frame	02	WOOD FRAME 100
Stories	1.	1. 100
Units		1 100
Quality	03	Quality Level 03
DOR CODE	0100	SINGLE FAMILY
MAP NUM		MKT AREA 04
NEIGHBORHOOD/LOC	4011.00	

AREA TYPE	TOTAL GROSS AREA	PCT OF BASE	YEAR	TOT ADJ AREA	SUBAREA MARKET VALUE
BAS	2,521	100	2025	2,521	349,310
FGR	702	55	2025	386	53,484
FOP	227	30	2025	68	9,422
FOP	706	30	2025	212	29,375
FST	18	55	2025	10	1,386
STR	44	10	2025	4	554
UAT	829	10	2025	83	11,500
TOTALS	5,047			3,284	455,031

MARKET ADJUSTMENTS

TYPE	MDL	EFF. AREA	TOT ADJ PTS	EFF. BASE RATE	REPL. COST NEW	AYB	EYB	ECON	FNCT		NORM	% COND
0900	01	3,284	104.9720	138.56	455,031	2024	2024	0	0	0	0.00	100.00

1 SNGL FAM – 100% - 2025 Heated Area: 2521 HX Base Yr 2025

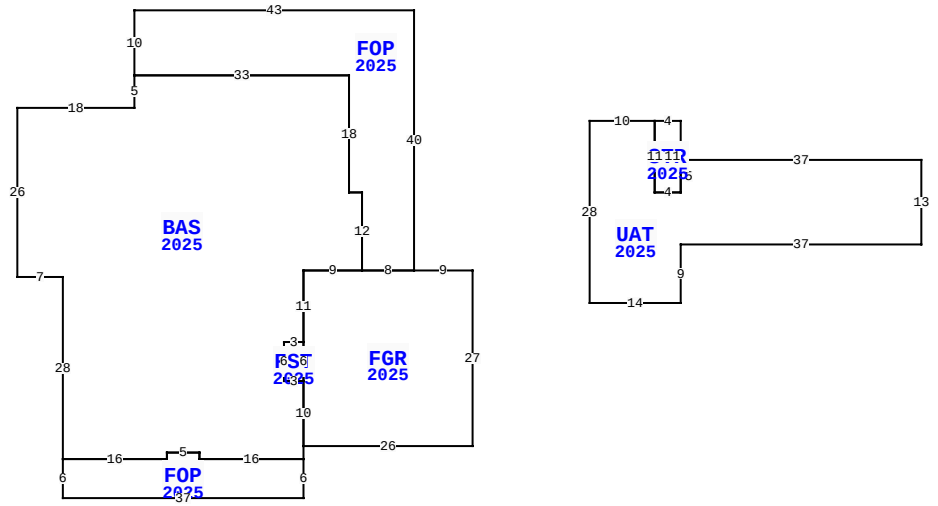

96147 CAYMAN CIR, FERNANDINA BEACH

BLD DATE		LGL DATE	
XF DATE		LAND DATE	04/25/2025 MLU
INC DATE		AG DATE	

VALUATION SUMMARY

VALUATION BY		STANDARD
Tax Group: 4	Tax Dist:	
BUILDING MARKET VALUE		455,031
TOTAL MARKET OB/XF VALUE		24,334
TOTAL LAND VALUE - MARKET		95,000
TOTAL MARKET VALUE		574,365
SOH/AGL Deduction		122,536
ASSESSED VALUE		451,829
TOTAL EXEMPTION VALUE	HX HB	50,722
BASE TAXABLE VALUE		401,107
TOTAL JUST VALUE		574,365
NCON VALUE		479,365
INCOME VALUE		
PREVIOUS YEAR MKT VALUE		75,000

PERMIT NUM	DESCRIPTION	AMT	ISSUED
CO240005388	PRIVATE PROVIDER	499,238	05/03/2024
B230008840		499,238	07/11/2023

SALES DATA

OFF RECORD Number	DATE	TYPE INST	Q / U	V / I	RSN CD	SALE PRICE
2332/1404	1/16/2020	WD	Q	V	01	67,500
GRANTOR: PAIGE JON A & LINDA A						
GRANTEE: VAZQUEZ JOSE M & KE						
1986/0786	6/18/2015	WD	Q	V	02	48,500
GRANTOR: BLADEN RUSSELL						
GRANTEE: PAIGE JON A & LINDA						

BUILDING NOTES

EXTRA FEATURES

LN	OB/XF CODE	DESCRIPTION	BLD	CAP	L	W	UNITS	UT	Adj R	ADJ UNIT PRICE	ORIG COND	YEAR ON	YEAR ACTUAL	Q	% COND	OB/XF MKT VALUE	NOTES
1	0811	CONCRETE B	0	100	0	0	1,608.00	SF	5.20	5.20	100	2025	2024		100	8,362	
2	0476	VF 6 SBPL	0	100	0	0	216.00	LF	32.00	32.00	100	2025	2024		100	6,912	
3	0462	ST/AL FNC	0	100	0	0	816.00	SF	10.00	10.00	100	2025	2024		100	8,160	
4	0470	VNYL GATE	0	100	0	0	3.00	UT	300.00	300.00	100	2025	2024		100	900	

BUILDING DIMENSIONS

BAS=[YR=2025;ORIG=20,15] E33 S18 E2 S12 W9 S11 W3 S6 E3 S10 S2 W16 N1 W5 S1 W16 N28 W7 N26 E18 N5 $
UAT=[YR=2025;ORIG=90,22] E10 S11 E4 N5 E37 S13 W37 S9 W14 N28 $
FGR=[YR=2025;ORIG=46,45] E9 E8 E9 S27 W26 N10 N6 N11 $
FOP=[YR=2025;ORIG=20,15] E33 S18 E2 S12 E8 N40 W43 S10 $
FOP=[YR=2025;ORIG=9,74] E16 N1 E5 S1 E16 S6 W37 N6 $
STR=[YR=2025;ORIG=104,33] W4 N11 E4 S11 $
FST=[YR=2025;ORIG=43,56] E3 S6 W3 N6 $
.

LAND DESCRIPTION

TOTAL OB/XF 24,334

LN	USE CODE	CLS	LAND USE DESCRIPTION	CAP	RD	LOC ZONE	FRONT	DEPTH	TOT LND UTS	UNIT TYPE	DT	DPTH FACT	% COND	TOT ADJ	UNIT PRICE	ADJ UNIT PRICE	LAND VALUE	OTHER ADJUSTMENTS AND NOTES	YEAR	DENSITY	DECL	FRZ	YR	CONSRV
1	000134	C	RES POND	100		PUD	0.00	0.00	1.00	LT		1.00	1.00	1.00	95,000.00	95,000.00	95,000							

REVIEW DATE 01/07/2025 BY NW Total Acres: 0.00 Total Land Value: 95,000 Market: 0 Agricultural: 0 Common: 95,000 PRINTED 07/30/2025 BY SYS