BLOCK 2 LOT 1
IN OR 833 PG 654
NASSAU LAKES 1A PB 5/70 & 71

FRANCIS DAVID C & KAREN J
96038 PARLIAMENT DRIVE
FERNANDINA BEACH, FL 32034

**2025**

**27-2N-28-141A-0002-0010**

## NASSAU COUNTY PROPERTY



## BUILDING CHARACTERISTICS

| ELEMENT | CD | CONSTRUCTION |
|---|---|---|
| Exterior Wall | 16 | WD FR STUC 60 |
| Exterior Wall | 12 | CEDAR 40 |
| Roof Structur | 03 | GABLE/HIP 100 |
| Roof Cover | 03 | COMP SHNGL 100 |
| Interior Wall | 05 | DRYWALL 100 |
| Interior Floo | 14 | CARPET 100 |
| Air Condition | 03 | CENTRAL 100 |
| Heating Type | 04 | AIR DUCTED 100 |
| Bedrooms | | 3 100 |
| Bathrooms | | 3 100 |
| Frame | 02 | WOOD FRAME 100 |
| Stories | 2. | 2. 100 |
| Units | | 0 100 |
| BUD8 Adjustme | 04 | DIST 01 100 |
| Occupancy | 00 | NONE 100 |
| Quality | 03 | Quality Level 03 |
| DOR CODE | 0100 | SINGLE FAMILY |
| MAP NUM | | MKT AREA 04 |
| NEIGHBORHOOD/LOC | 4011.00 | |

| AREA TYPE | TOTAL GROSS AREA | PCT OF BASE | YEAR | TOT ADJ AREA | SUBAREA MARKET VALUE |
|---|---|---|---|---|---|
| BAS | 1,658 | 100 | 1993 | 1,658 | 202,731 |
| FGR | 506 | 55 | 1993 | 278 | 33,992 |
| FOP | 52 | 30 | 1993 | 16 | 1,957 |
| FOP | 104 | 30 | 1993 | 31 | 3,791 |
| FOP | 140 | 30 | 1993 | 42 | 5,136 |
| FSP | 100 | 40 | 1993 | 40 | 4,891 |
| FUS | 420 | 100 | 1993 | 420 | 51,356 |
| UOP | 321 | 20 | 1993 | 64 | 7,826 |
| TOTALS | 3,301 | | | 2,549 | 311,679 |

## MARKET ADJUSTMENTS

| TYPE | MDL | EFF. AREA | TOT ADJ PTS | EFF. BASE RATE | REPL. COST NEW | AYB | EYB | ECON | FNCT | | NORM | % COND |
|---|---|---|---|---|---|---|---|---|---|---|---|---|
| 0900 | 01 | 2,549 | 107.7120 | 142.18 | 362,417 | 1986 | 1996 | 0 | 0 | 0 | 14.00 | 86.00 |

1 SNGL FAM – 100% - 1999 Heated Area: 2078 HX Base Yr 1999

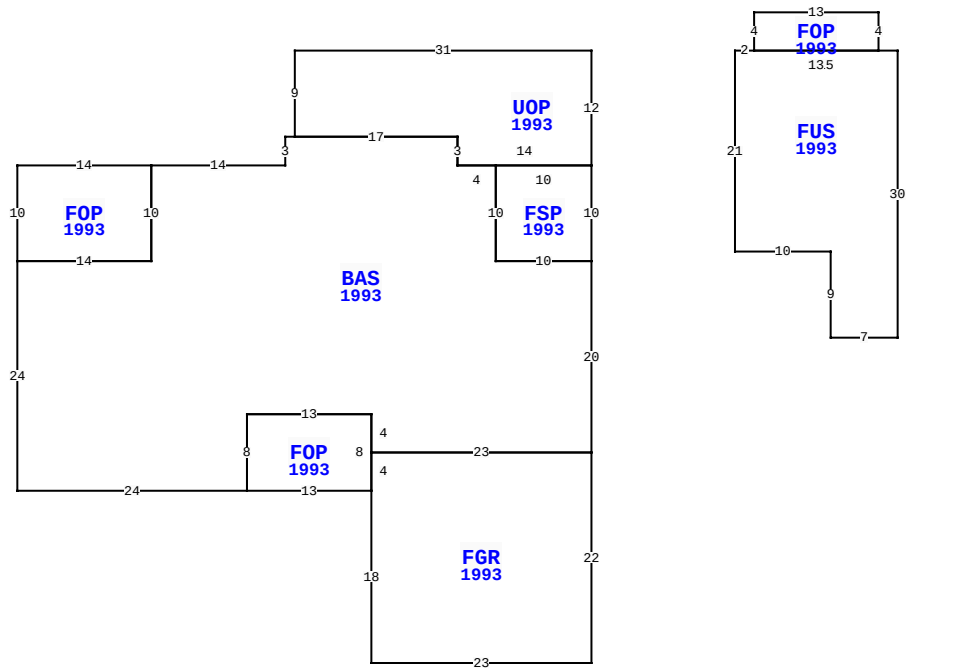


96038 PARLIAMENT DR, FERNANDINA BEACH

| | | | |
|---|---|---|---|
| BLD DATE | | LGL DATE | |
| XF DATE | | LAND DATE | 04/25/2025 MLU |
| INC DATE | | AG DATE | |

## VALUATION SUMMARY

| | | |
|---|---|---|
| VALUATION BY | | STANDARD |
| Tax Group: 4 | Tax Dist: | |
| BUILDING MARKET VALUE | | 311,679 |
| TOTAL MARKET OB/XF VALUE | | 13,128 |
| TOTAL LAND VALUE - MARKET | | 95,000 |
| TOTAL MARKET VALUE | | 419,807 |
| SOH/AGL Deduction | | 216,586 |
| ASSESSED VALUE | | 203,221 |
| TOTAL EXEMPTION VALUE | HX HB | 50,722 |
| BASE TAXABLE VALUE | | 152,499 |
| TOTAL JUST VALUE | | 419,807 |
| NCON VALUE | | 0 |
| INCOME VALUE | | |
| PREVIOUS YEAR MKT VALUE | | 368,320 |

| PERMIT NUM | DESCRIPTION | AMT | ISSUED |
|---|---|---|---|
| M014977 | GAS PUMPS | 0 | 04/01/2000 |

## SALES DATA

| OFF RECORD Number | DATE | TYPE INST | Q U | V I | RSN CD | SALE PRICE |
|---|---|---|---|---|---|---|
| 0833/0654 | 5/11/1998 | WD | Q | I | | 148,900 |
| GRANTOR: MAYO WILLIAM E JR & S | | | | | | |
| GRANTEE: FRANCIS DAVID & KAR | | | | | | |
| 0548/0891 | 7/26/1988 | WD | U | I | 07 | 135,000 |
| GRANTOR: NORTON J ALFRED | | | | | | |
| GRANTEE: MAYO WILLIAM E JR | | | | | | |

## BUILDING NOTES

## BUILDING DIMENSIONS

UOP=[YR=1993] W31 S9 BAS=[YR=1993] W1 S3 W14 FOP=[YR=1993] W14 S10 E14 N10$ S10 W14 S24 E24 FOP=[YR=1993] E13 FGR=[YR=1993] S18 E23 N22 W23S4$ N8 W13 S8$ N8 E13 S4 E23 N20 FSP=[YR=1993] N10 W10 S10 E10$ W10 N10 W4 N3 W17$ E17 S3 E14 N12$ PTR= E15 FUS=[YR=1993] E2 FOP=[YR=1993] N4 E13 S4 W13$ E15 S30 W7 N9 W10 N21 $ W15$.

## EXTRA FEATURES

| LN | OB/XF CODE | DESCRIPTION | BLD | CAP | L | W | UNITS | UT | Adj R | ADJ UNIT PRICE | ORIG COND | YEAR ON | YEAR ACTUAL | Q | % COND | OB/XF MKT VALUE | NOTES |
|---|---|---|---|---|---|---|---|---|---|---|---|---|---|---|---|---|---|
| 1 | 0504 | FP-ELECTRI | 0 | 100 | 0 | 0 | 1.00 | UT | 2,000.00 | 2,000.00 | 100 | 1986 | 1986 | 3 | 58 | 1,160 | |
| 2 | 0810 | CONCRETE A | 0 | 100 | 0 | 0 | 398.00 | SF | 6.50 | 6.50 | 100 | 1986 | 1986 | 3 | 47 | 1,216 | |
| 3 | 0812 | CONCRETE C | 0 | 100 | 0 | 0 | 2,567.00 | SF | 4.00 | 4.00 | 100 | 1998 | 1998 | 3 | 73 | 7,496 | |
| 4 | 1242 | WD DECK A | 0 | 100 | 0 | 0 | 440.00 | SF | 10.00 | 10.00 | 100 | 2017 | 2017 | 3 | 74 | 3,256 | |

## LAND DESCRIPTION

TOTAL OB/XF 13,128

| LN | USE CODE | CLS | LAND USE DESCRIPTION | CAP | RD | LOC ZONE | FRONT | DEPTH | TOT LND UTS | UNIT TYPE | DT | DPTH FACT | % COND | TOT ADJ | UNIT PRICE | ADJ UNIT PRICE | LAND VALUE | OTHER ADJUSTMENTS AND NOTES | YEAR | DENSITY | DECL | FRZ | YR | CONSRV |
|---|---|---|---|---|---|---|---|---|---|---|---|---|---|---|---|---|---|---|---|---|---|---|---|---|
| 1 | 000134 | C | RES POND | 100 | | PUD | 0.00 | 0.00 | 1.00 | LT | | 1.00 | 1.00 | 1.00 | 95,000.00 | 95,000.00 | 95,000 | | | | | | | |

REVIEW DATE 05/12/2019 BY KBA Total Acres: 0.00 Total Land Value: 95,000 Market: 0 Agricultural: 0 Common: 95,000 PRINTED 07/30/2025 BY SYS