BLOCK 1 LOT 10
NASSAU LAKES 1A PB 5/70-71

THRIFT MARGARET M L/E/
96322 PARLIAMENT DRIVE
FERNANDINA BEACH, FL 32034

2025

27-2N-28-141A-0001-0100

NASSAU COUNTY PROPERTY

BUILDING CHARACTERISTICS

ELEMENT	CD	CONSTRUCTION
Exterior Wall	16	WD FR STUC 100
Roof Structur	08	IRREGULAR 100
Roof Cover	03	COMP SHNGL 100
Interior Wall	05	DRYWALL 100
Interior Floo	14	CARPET 80
Interior Floo	11	CLAY TILE 20
Air Condition	03	CENTRAL 100
Heating Type	04	AIR DUCTED 100
Bedrooms		4 100
Bathrooms		2 100
Frame	02	WOOD FRAME 100
Stories	1.	1. 100
Units		0 100
Occupancy	00	NONE 100
Quality	03	Quality Level 03
DOR CODE	0100	SINGLE FAMILY
MAP NUM		MKT AREA 04
NEIGHBORHOOD/LOC	4011.00	

AREA TYPE	TOTAL GROSS AREA	PCT OF BASE	YEAR	TOT ADJ AREA	SUBAREA MARKET VALUE
BAS	2,119	100	1999	2,119	262,210
FGR	586	55	1999	322	39,845
FOP	39	30	1999	12	1,485
FOP	138	30	1999	41	5,073
FOP	300	30	1999	90	11,137
FSP	282	40	1999	113	13,983
TOTALS	3,464			2,697	333,734

MARKET ADJUSTMENTS

TYPE	MDL	EFF. AREA	TOT ADJ PTS	EFF. BASE RATE	REPL. COST NEW	AYB	EYB	ECON	FNCT		NORM	% COND
0900	01	2,697	107.1360	141.42	381,410	1999	1999	0	0	0	12.50	87.50

1 SNGL FAM – 100% - 0 Heated Area: 2119 HX Base Yr 2020

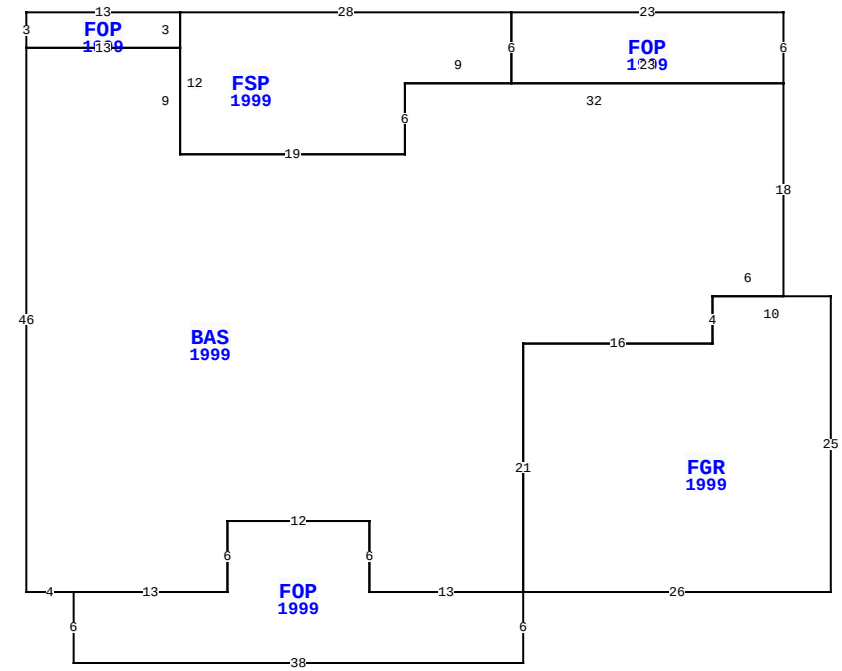

BLD DATE		LGL DATE	
XF DATE		LAND DATE	04/25/2025 MLU
INC DATE		AG DATE	

96322 PARLIAMENT DR, FERNANDINA BEACH

VALUATION SUMMARY

VALUATION BY		STANDARD
Tax Group: 4	Tax Dist:	
BUILDING MARKET VALUE		333,734
TOTAL MARKET OB/XF VALUE		43,899
TOTAL LAND VALUE - MARKET		95,000
TOTAL MARKET VALUE		472,633
SOH/AGL Deduction		233,436
ASSESSED VALUE		239,197
TOTAL EXEMPTION VALUE	HX HB WX	55,722
BASE TAXABLE VALUE		183,475
TOTAL JUST VALUE		472,633
NCON VALUE		0
INCOME VALUE		
PREVIOUS YEAR MKT VALUE		442,276

PERMIT NUM	DESCRIPTION	AMT	ISSUED
B2108345	REPLACE GARAGE DO	1,500	08/01/2021
R2108821	ROOF	27,757	07/06/2021
B20939	SWIM POOL	28,000	01/01/2008
B0210390	FOUNDATION	4,640	01/01/2003
995741	NEW CONSTR	11,900	03/01/1999
9905793	NEW CONSTR	130,000	02/01/1999

SALES DATA

OFF RECORD Number	DATE	TYPE INST	Q / U	V / I	RSN CD	SALE PRICE
2720/1345	4/15/2024	QC	U	I	11	100
GRANTOR: THRIFT MARGARET MARY						
GRANTEE: WOOTEN SHANNON						
2345/0432	3/05/2020	FJ	U	I	11	100
GRANTOR: THRIFT CLIFFORD B EST						
GRANTEE: THRIFT MARGARET M						

BUILDING NOTES

BUILDING DIMENSIONS

FOP=[YR=1999] W23 FSP=[YR=1999] W28 FOP=[YR=1999] W13 S3 BAS=[YR=1999] S46 E4 FOP=[YR=1999] S6 E38 N6 FGR=[YR=1999] E26 N25 W10 S4 W16 S21$ W13 N6 W12 S6 W13$ E13 N6 E12 S6 E13 N21 E16 N4 E6 N18 W32 S6 W19 N9 W13$ E13 N3$ S12 E19 N6 E9 N6$ S6 E23 N6$.

EXTRA FEATURES

LN	OB/XF CODE	DESCRIPTION	BLD	CAP	L	W	UNITS	UT	Adj R	ADJ UNIT PRICE	ORIG COND	YEAR ON	YEAR ACTUAL	Q	% COND	OB/XF MKT VALUE	NOTES
1	0810	CONCRETE A	0	100	0	0	137.00	SF	6.50	6.50	100	1999	1999	3	75	668	
2	0811	CONCRETE B	0	100	88	20	1,760.00	SF	5.20	5.20	100	1999	1999	3	75	6,864	
3	0500	FP-PRE FAB	0	100	0	0	1.00	UT	3,500.00	3,500.00	100	1999	1999	3	81	2,835	
4	0812	CONCRETE C	0	100	0	0	2,414.00	SF	4.00	4.00	100	2001	2001	3	79	7,628	
5	0861	POOL GUNIT	0	100	0	0	425.00	SF	85.00	85.00	100	2008	2008	3	48	17,340	
6	0855	CONC PAVER	0	100	0	0	875.00	SF	10.00	10.00	100	2008	2008	3	88	7,700	
7	0479	VF PICKET	0	100	0	0	120.00	LF	10.00	10.00	100	2008	2008	3	72	864	

LAND DESCRIPTION

TOTAL OB/XF 43,899

LN	USE CODE	CLS	LAND USE DESCRIPTION	CAP	RD	LOC ZONE	FRONT	DEPTH	TOT LND UTS	UNIT TYPE	DT	DPTH FACT	% COND	TOT ADJ	UNIT PRICE	ADJ UNIT PRICE	LAND VALUE	OTHER ADJUSTMENTS AND NOTES	YEAR	DENSITY	DECL	FRZ	YR	CONSRV
1	000134	C	RES POND	100		PUD	0.00	0.00	1.00	LT		1.00	1.00	1.00	95,000.00	95,000.00	95,000							

REVIEW DATE 11/27/2019 BY KWA Total Acres: 0.00 Total Land Value: 95,000 Market: 0 Agricultural: 0 Common: 95,000 PRINTED 07/30/2025 BY SYS