BLOCK 1 LOT 3
NASSAU LAKES 1A PB 5/70 & 71

MCWHORTER JODIE GST TRUST/MCWHORTER STUART TRUSTEE
96204 NASSAU LAKES CIR
FERNANDINA BEACH, FL 32034

2025

27-2N-28-141A-0001-0030

BUILDING CHARACTERISTICS

ELEMENT	CD	CONSTRUCTION
Exterior Wall	12	CEDAR 90
Exterior Wall	20	FACE BRICK 10
Roof Structur	03	GABLE/HIP 100
Roof Cover	03	COMP SHNGL 100
Interior Wall	05	DRYWALL 100
Interior Floo	13	LVT/LAMNT 100
Air Condition	03	CENTRAL 100
Heating Type	04	AIR DUCTED 100
Bedrooms		3 100
Bathrooms		2 100
Frame	02	WOOD FRAME 100
Stories	1.	1. 100
Units		0 100
Occupancy	00	NONE 100
Quality	03	Quality Level 03
DOR CODE	0100	SINGLE FAMILY
MAP NUM		MKT AREA 04
NEIGHBORHOOD/LOC	4011.00	

AREA TYPE	TOTAL GROSS AREA	PCT OF BASE	YEAR	TOT ADJ AREA	SUBAREA MARKET VALUE
BAS	1,741	100	1993	1,741	225,809
FCP	130	25	1993	32	4,151
FCP	130	25	1993	32	4,151
FDG	540	60	1993	324	42,023
FGR	575	55	1993	316	40,985
FOP	311	30	1993	93	12,062
PTO	341	5	1993	17	2,205
TOTALS	3,768			2,555	331,385

MARKET ADJUSTMENTS

TYPE	MDL	EFF. AREA	TOT ADJ PTS	EFF. BASE RATE	REPL. COST NEW	AYB	EYB	ECON	FNCT		NORM	% COND
0900	01	2,555	109.1520	144.08	368,124	1990	2005	0	0	0	9.98	90.02

1 SNGL FAM – 0% - 2023 Heated Area: 1741 HX Base Yr

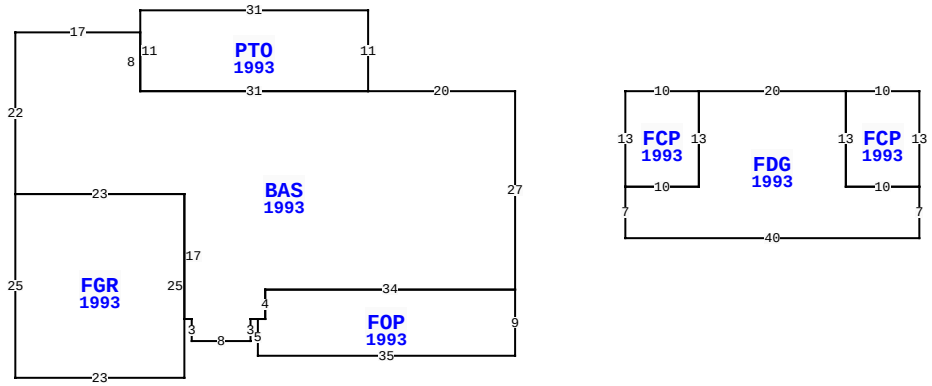

96204 NASSAU LAKES CIR, FERNANDINA BEACH

BLD DATE		LGL DATE	
XF DATE		LAND DATE	04/25/2025 MLU
INC DATE		AG DATE	

NASSAU COUNTY PROPERTY

PAGE 1 of 1 4

VALUATION SUMMARY

VALUATION BY	STANDARD
Tax Group: 4	Tax Dist:
BUILDING MARKET VALUE	331,385
TOTAL MARKET OB/XF VALUE	14,601
TOTAL LAND VALUE - MARKET	95,000
TOTAL MARKET VALUE	440,986
SOH/AGL Deduction	0
ASSESSED VALUE	440,986
TOTAL EXEMPTION VALUE	0
BASE TAXABLE VALUE	440,986
TOTAL JUST VALUE	440,986
NCON VALUE	0
INCOME VALUE	
PREVIOUS YEAR MKT VALUE	424,161

PERMIT NUM	DESCRIPTION	AMT	ISSUED
22001353	ROOF	16,000	02/02/2022
6542	NEW CONSTR	4,769	03/08/1990
6298	NEW CONSTR	76,278	02/16/1990

SALES DATA

OFF RECORD Number	DATE	TYPE INST	Q / U	V / I	RSN CD	SALE PRICE
2536/0946	2/04/2022	WD	Q	I	01	549,000
GRANTOR: BABOWICZ ANTHONY P &						
GRANTEE: JODIE MCWHORTER GST						
2467/1504	6/01/2021	WD	Q	I	02	382,700
GRANTOR: WILSON MARGARET KAY						
GRANTEE: BABOWICZ ANTHONY P						

BUILDING NOTES

BUILDING DIMENSIONS

BAS=[YR=1993] W20 PTO=[YR=1993] N11 W31 S11 E31 $ W31 N8 W17 S22 FGR=[YR=1993] S25 E23 N25 W23 $ E23 S17 E1 S3 E8 N3 E1 FOP=[YR=1993] S5 E35 N9 W34 S4 W1 $ E1 N4 E34 N27 $ PTR= E15 FCP=[YR=1993] E10 FDG=[YR=1993] E20 FCP=[YR=1993] E10 S13 W10 N13 $ S13 E10 S7 W40 N7 E10 N13 $ S13 W10 N13 $ W15 $.

EXTRA FEATURES

LN	OB/XF CODE	DESCRIPTION	BLD	CAP	L	W	UNITS	UT	Adj R	ADJ UNIT PRICE	ORIG COND	YEAR ON	YEAR ACTUAL	Q	% COND	OB/XF MKT VALUE	NOTES
1	0500	FP-PRE FAB	0	0	0	0	1.00	UT	3,500.00	3,500.00	100	1990	1990	3	66	2,310	
2	0810	CONCRETE A	0	0	34	17	578.00	SF	6.50	6.50	100	1990	1990	3	57	2,141	
3	0811	CONCRETE B	0	0	0	0	1,800.00	SF	5.20	5.20	100	1996	1996	3	70	6,552	
4	0810	CONCRETE A	0	0	96	3	288.00	SF	6.50	6.50	100	1996	1996	3	70	1,310	
5	0350	CARPORT WD	0	0	40	20	800.00	SF	13.00	13.00	100	2005	2005	3	22	2,288	

LAND DESCRIPTION

TOTAL OB/XF 14,601

LN	USE CODE	CLS	LAND USE DESCRIPTION	CAP	RD	LOC ZONE	FRONT	DEPTH	TOT LND UTS	UNIT TYPE	DT	DPTH FACT	% COND	TOT ADJ	UNIT PRICE	ADJ UNIT PRICE	LAND VALUE	OTHER ADJUSTMENTS AND NOTES	YEAR	DENSITY	DECL	FRZ	YR	CONSRV
1	000134	C	RES POND	0		PUD	0.00	0.00	1.00	LT		1.00	1.00	1.00	95,000.00	95,000.00	95,000							

REVIEW DATE 05/12/2019 BY KBA Total Acres: 0.00 Total Land Value: 95,000 Market: 0 Agricultural: 0 Common: 95,000 PRINTED 07/30/2025 BY SYS