LOT 3
IN OR 2239/948
MILLS CREEK FARMS OR 2223/225

KING AMANDA J
21016 CR 121
HILLIARD, FL 32046

2025

27-2N-23-1303-0003-0000

BUILDING CHARACTERISTICS

ELEMENT	CD	CONSTRUCTION
Exterior Wall	10	ABOVE AVG 100
Roof Structur	03	GABLE/HIP 100
Roof Cover	03	COMP SHNGL 100
Interior Wall	05	DRYWALL 100
Interior Floo	14	CARPET 70
Interior Floo	11	CLAY TILE 30
Air Condition	03	CENTRAL 100
Heating Type	04	AIR DUCTED 100
Bedrooms		3 100
Bathrooms		2 100
Frame	02	WOOD FRAME 100
Stories	0	0 100
Units		0 100
Occupancy	00	NONE 100
Quality	01	Quality Level 01
DOR CODE	5000	IMPROVED AG
MAP NUM		MKT AREA 09
NEIGHBORHOOD/LOC	9012.00	

AREA TYPE	TOTAL GROSS AREA	PCT OF BASE	YEAR	TOT ADJ AREA	SUBAREA MARKET VALUE
BAS	1,773	100	2019	1,773	228,382
FGR	576	55	2019	317	40,833
FOP	84	30	2019	25	3,220
FOP	220	30	2019	66	8,502
TOTALS	2,653			2,181	280,938

MARKET ADJUSTMENTS

TYPE	MDL	EFF. AREA	TOT ADJ PTS	EFF. BASE RATE	REPL. COST NEW	AYB	EYB	ECON	FNCT		NORM	% COND
0900	01	2,181	99.5778	131.44	286,671	2019	2019	0	0	0	2.00	98.00

1 SNGL FAM – 100% - 2023 Heated Area: 1773 HX Base Yr 2023

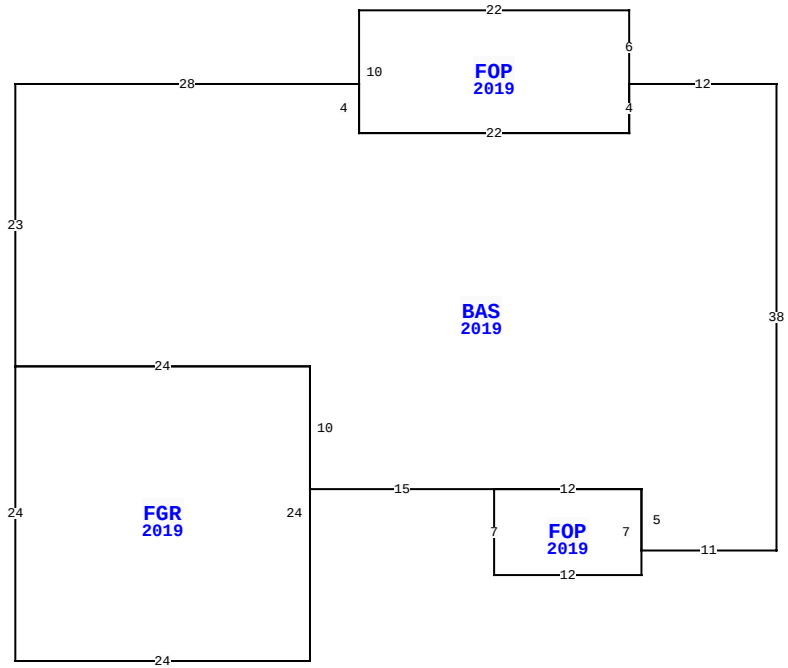

21016 CR 121, HILLIARD

BLD DATE		LGL DATE	
XF DATE		LAND DATE	05/09/2025 MLU
INC DATE		AG DATE	11/04/2024 KBA

NASSAU COUNTY PROPERTY

PAGE 1 of 1 6

VALUATION SUMMARY

VALUATION BY		STANDARD
Tax Group: 6	Tax Dist:	
BUILDING MARKET VALUE		280,938
TOTAL MARKET OB/XF VALUE		2,166
TOTAL LAND VALUE - MARKET		190,000
TOTAL MARKET VALUE		354,604
SOH/AGL Deduction		13,961
ASSESSED VALUE		340,643
TOTAL EXEMPTION VALUE	HX HB	50,722
BASE TAXABLE VALUE		289,921
TOTAL JUST VALUE		473,104
NCON VALUE		0
INCOME VALUE		
PREVIOUS YEAR MKT VALUE		429,585

PERMIT NUM	DESCRIPTION	AMT	ISSUED
20005412	CO ISSUED	0	06/23/2020
19003626	NEW CONSTR	257,360	04/10/2019

SALES DATA

OFF RECORD Number	DATE	TYPE INST	Q / U	V / I	RSN CD	SALE PRICE
2239/0948	11/21/2018	WD	Q	V	05	100,000

GRANTOR: OCEANS EIGHT CREATIVE

GRANTEE: KING AMANDA J

BUILDING NOTES

BUILDING DIMENSIONS

BAS=[YR=2019] W12 FOP=[YR=2019] N6 W22 S10 E22 N4$ S4 W22 N4 W28 S23 FGR=[YR=2019] S24 E24 N24 W24$ E24 S10 E15 FOP=[YR=2019] S7 E12 N7 W12$ E12 S5 E11 N38$.

EXTRA FEATURES

LN	OB/XF CODE	DESCRIPTION	BLD	CAP	L	W	UNITS	UT	Adj R	ADJ UNIT PRICE	ORIG COND	YEAR ON	YEAR ACTUAL	Q	% COND	OB/XF MKT VALUE	NOTES
1	0810	CONCRETE A	0	100	20	17	340.00	SF	6.50	6.50	100	2020	2020	3	98	2,166	

LAND DESCRIPTION

TOTAL OB/XF 2,166

LN	USE CODE	CLS	LAND USE DESCRIPTION	CAP	RD	LOC ZONE	FRONT	DEPTH	TOT LND UTS	UNIT TYPE	DT	DPTH FACT	% COND	TOT ADJ	UNIT PRICE	ADJ UNIT PRICE	LAND VALUE	OTHER ADJUSTMENTS AND NOTES	YEAR	DENSITY	DECL	FRZ	YR	CONSRV
1	005000	C	AGRICULTURAL	100		OR	0.00	0.00	2.00	AC		1.00	1.00	1.00	35,000.00	35,000.00	70,000							
2	005100	A	CROPLAND1	0		OR	0.00	0.00	4.00	AC		1.00	1.00	1.00	375.00	375.00	1,500							
3	009910	M	MARKET VALUE	0		OR	0.00	0.00	4.00	AC		1.00	1.00	1.00	30,000.00	30,000.00	120,000							

REVIEW DATE 11/24/2020 BY TW Total Acres: 6.00 Total Land Value: 71,500 Market: 120,000 Agricultural: 1,500 Common: 70,000 PRINTED 07/30/2025 BY SYS