PT SE1/4 SEC 27-2N-23E
IN OR 2696/1035

BLAS LISA & MICHAEL
3200 JANE LANE
HILLIARD, FL 32046

2025

27-2N-23-0000-0001-0240

BUILDING CHARACTERISTICS

ELEMENT	CD	CONSTRUCTION
Exterior Wall	31	HARDIE BRD 100
Roof Structur	08	IRREGULAR 100
Roof Cover	03	COMP SHNGL 100
Interior Wall	05	DRYWALL 100
Interior Floo	08	SHT VINYL 70
Interior Floo	11	CLAY TILE 30
Air Condition	03	CENTRAL 100
Heating Type	04	AIR DUCTED 100
Bedrooms		3 100
Bathrooms		2.5 100
Frame	02	WOOD FRAME 100
Stories	0	0 100
Units		0 100
Occupancy	00	NONE 100
Quality	02	Quality Level 02
DOR CODE	0100	SINGLE FAMILY
MAP NUM		MKT AREA 09
NEIGHBORHOOD/LOC	9001.00	

AREA TYPE	TOTAL GROSS AREA	PCT OF BASE	YEAR	TOT ADJ AREA	SUBAREA MARKET VALUE
BAS	2,003	100	2020	2,003	298,252
FGR	575	55	2020	316	47,053
FOP	265	30	2020	80	11,913
FOP	624	30	2020	187	27,845
FUS	299	100	2020	299	44,522
FUS	899	100	2020	899	133,863
STR	52	10	2020	5	745
TOTALS	4,717			3,789	564,191

MARKET ADJUSTMENTS

TYPE	MDL	EFF. AREA	TOT ADJ PTS	EFF. BASE RATE	REPL. COST NEW	AYB	EYB	ECON	FNCT		NORM	% COND
0500	01	3,789	95.6745	151.17	572,783	2020	2020	0	0	0	1.50	98.50

1 SFR CUST – 100% - 2025 Heated Area: 3201 HX Base Yr 2025

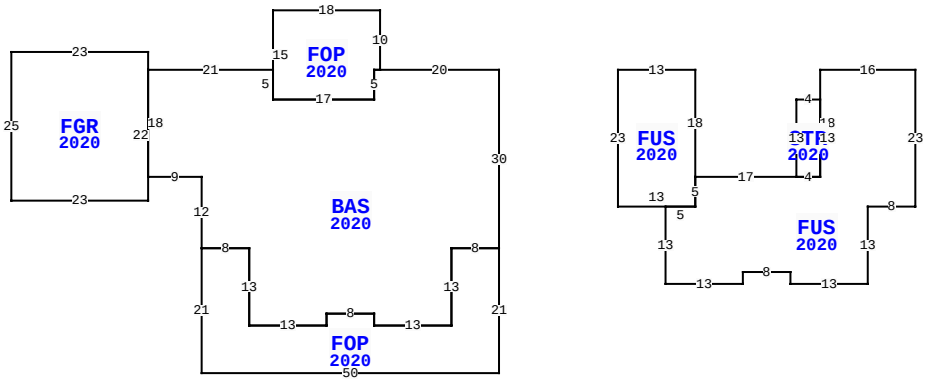

3200 JANE LN, HILLIARD

BLD DATE		LGL DATE	
XF DATE		LAND DATE	05/09/2025 MLU
INC DATE		AG DATE	

NASSAU COUNTY PROPERTY

PAGE 1 of 2 6

VALUATION SUMMARY

VALUATION BY		STANDARD
Tax Group: 6	Tax Dist:	
BUILDING MARKET VALUE		590,980
TOTAL MARKET OB/XF VALUE		9,561
TOTAL LAND VALUE - MARKET		109,200
TOTAL MARKET VALUE		709,741
SOH/AGL Deduction		0
ASSESSED VALUE		709,741
TOTAL EXEMPTION VALUE	HX HB	50,722
BASE TAXABLE VALUE		659,019
TOTAL JUST VALUE		709,741
NCON VALUE		26,789
INCOME VALUE		
PREVIOUS YEAR MKT VALUE		611,880

PERMIT NUM	DESCRIPTION	AMT	ISSUED
B240002533	ADD 30X40 BARN	38,520	03/04/2024
20008849	CO ISSUED	0	09/24/2020
20002546	NEW CONSTR	405,038	03/20/2020

SALES DATA

OFF RECORD Number	DATE	TYPE INST	Q / U	V / I	RSN CD	SALE PRICE
2696/1035	2/14/2024	WD	Q	I	01	835,000
GRANTOR: ATKINS DREW HORNER &						
GRANTEE: BLAS LISA & MICHAEL						
2233/0856	10/29/2018	WD	U	V	37	60,000
GRANTOR: BURKE JOHN PAUL & RHO						
GRANTEE: ATKINS DREW HORNER						

BUILDING NOTES

EXTRA FEATURES

LN	OB/XF CODE	DESCRIPTION	BLD	CAP	L	W	UNITS	UT	Adj R	ADJ UNIT PRICE	ORIG COND	YEAR ON	YEAR ACTUAL	Q	% COND	OB/XF MKT VALUE	NOTES
1	0812	CONCRETE C	0	100	0	0	2,439.00	SF	4.00	4.00	100	2020	2020	3	98	9,561	

BUILDING DIMENSIONS

BAS=[YR=2020;ORIG=0,0] W20 W1 S5 W17 N5 W21 S18 E9 S12 E8 S13 E13 N2 E8 S2 E13 N13 E8 N30 $
FUS=[YR=2020;ORIG=33,18] E17 E4 N18 E16 S23 W8 S13 W13 N2 W8 S2 W13 N13 E5 N5 $
FOP=[YR=2020;ORIG=-50,30] S21 E50 N21 W8 S13 W13 N2 W8 S2 W13 N13 W8 $
FGR=[YR=2020;ORIG=-59,0] N3 W23 S25 E23 N22 $
FUS=[YR=2020;ORIG=20,0] E13 S18 S5 W13 N23 $
FOP=[YR=2020;ORIG=-20,0] N10 W18 S15 E17 N5 E1 $
STR=[YR=2020;ORIG=50,18] N13 E4 S13 W4 $
PTR=[ORIG=0,0] E20 W20 $
.

LAND DESCRIPTION

TOTAL OB/XF 9,561

LN	USE CODE	CLS	LAND USE DESCRIPTION	CAP	RD	LOC ZONE	FRONT	DEPTH	TOT LND UTS	UNIT TYPE	DT	DPTH FACT	% COND	TOT ADJ	UNIT PRICE	ADJ UNIT PRICE	LAND VALUE	OTHER ADJUSTMENTS AND NOTES	YEAR	DENSITY	DECL	FRZ	YR	CONSRV
1	000100	C	RES	100		OR	0.00	0.00	5.60	AC		1.00	1.00	1.00	19,500.00	19,500.00	109,200							

REVIEW DATE 06/05/2024 BY WW Total Acres: 5.60 Total Land Value: 109,200 Market: 0 Agricultural: 0 Common: 109,200 PRINTED 07/30/2025 BY SYS

PT SE1/4 SEC 27-2N-23E
IN OR 2696/1035

BLAS LISA & MICHAEL
3200 JANE LANE
HILLIARD, FL 32046

2025

27-2N-23-0000-0001-0240

NASSAU COUNTY PROPERTY

BUILDING CHARACTERISTICS

ELEMENT	CD	CONSTRUCTION
Exterior Wall	25	MOD METAL 100
Roof Structur	10	STEEL FRME 100
Roof Cover	12	MODULAR MT 100
Interior Wall	07	NONE 100
Interior Floo	03	CONC FINSH 100
Air Condition	01	NONE 100
Heating Type	01	NONE 100
Bedrooms		0 100
Bathrooms		0 100
Frame	05	STEEL 100
Quality	06	Quality Level 06

DOR CODE 0100 SINGLE FAMILY
MAP NUM | MKT AREA 09
NEIGHBORHOOD/LOC 9001.00

AREA TYPE	TOTAL GROSS AREA	PCT OF BASE	YEAR	TOT ADJ AREA	SUBAREA MARKET VALUE
BAS	1,200	100	2024	1,200	26,789
TOTALS	1,200			1,200	26,789

MARKET ADJUSTMENTS

TYPE	MDL	EFF. AREA	TOT ADJ PTS	EFF. BASE RATE	REPL. COST NEW	AYB	EYB	ECON	FNCT		NORM	% COND
6500	01	1,200	60.9500	22.55	27,060	2024	2024	0	0	0	1.00	99.00

2 GARAGE RES – 100% - 2025 Heated Area: 1200 HX Base Yr 2025

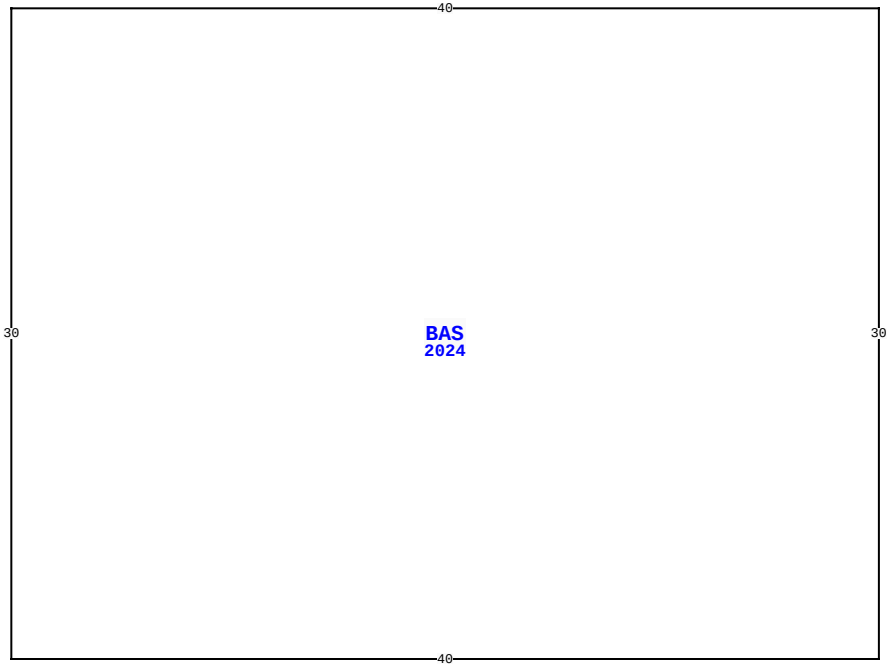

3200 JANE LN, HILLIARD

BLD DATE		LGL DATE	
XF DATE		LAND DATE	05/09/2025 MLU
INC DATE		AG DATE	

VALUATION SUMMARY

VALUATION BY		STANDARD
Tax Group: 6	Tax Dist:	
BUILDING MARKET VALUE		590,980
TOTAL MARKET OB/XF VALUE		9,561
TOTAL LAND VALUE - MARKET		109,200
TOTAL MARKET VALUE		709,741
SOH/AGL Deduction		0
ASSESSED VALUE		709,741
TOTAL EXEMPTION VALUE	HX HB	50,722
BASE TAXABLE VALUE		659,019
TOTAL JUST VALUE		709,741
NCON VALUE		26,789
INCOME VALUE		
PREVIOUS YEAR MKT VALUE		611,880

PERMIT NUM	DESCRIPTION	AMT	ISSUED

SALES DATA

OFF RECORD Number	DATE	TYPE INST	Q / U	V / I	RSN CD	SALE PRICE
2696/1035	2/14/2024	WD	Q	I	01	835,000
GRANTOR: ATKINS DREW HORNER &						
GRANTEE: BLAS LISA & MICHAEL						
2233/0856	10/29/2018	WD	U	V	37	60,000
GRANTOR: BURKE JOHN PAUL & RHO						
GRANTEE: ATKINS DREW HORNER						

BUILDING NOTES

BUILDING DIMENSIONS

BAS=[YR=2024;ORIG=40,10] E40 S30 W40 N30 $
.

EXTRA FEATURES

L N	OB/XF CODE	DESCRIPTION	BLD	CAP	L	W	UNITS	UT	Adj R	ADJ UNIT PRICE	ORIG COND	YEAR ON	YEAR ACTUAL	Q	% COND	OB/XF MKT VALUE	NOTES

LAND DESCRIPTION

TOTAL OB/XF 0

L N	USE CODE	CLS	LAND USE DESCRIPTION	CAP	R D	LOC ZONE	FRONT	DEPTH	TOT LND UTS	UNIT TYPE	D T	DPTH FACT	% COND	TOT ADJ	UNIT PRICE	ADJ UNIT PRICE	LAND VALUE	OTHER ADJUSTMENTS AND NOTES	YEAR	DENSITY	DECL	FRZ	YR	CONSRV

REVIEW DATE 06/05/2024 BY WW Total Acres: 5.60 Total Land Value: 109,200 Market: 0 Agricultural: 0 Common: 109,200 PRINTED 07/30/2025 BY SYS