PT LYING WEST OF IN OR 2586/1233
N1/2 OF NW1/4 OF NW1/4
EX R/W OR 603/1237

HUGGINS BRYCE S & ASHTON
573200 LESSIE RD
HILLIARD, FL 32046

2025

26-4N-25-0000-0005-0000

NASSAU COUNTY PROPERTY

BUILDING CHARACTERISTICS

ELEMENT	CD	CONSTRUCTION
Exterior Wall	11	BD/BTN AVG 100
Roof Structur	08	IRREGULAR 100
Roof Cover	12	MODULAR MT 100
Interior Wall	05	DRYWALL 100
Interior Floo	13	LVT/LAMNT 100
Air Condition	03	CENTRAL 100
Heating Type	04	AIR DUCTED 100
Bedrooms		3 100
Bathrooms		3 100
Frame	02	WOOD FRAME 100
Stories	1.5	1.5 100
Units		0 100
Quality	03	Quality Level 03
DOR CODE	0100	SINGLE FAMILY
MAP NUM		MKT AREA 05
NEIGHBORHOOD/LOC	5001.00	

AREA TYPE	TOTAL GROSS AREA	PCT OF BASE	YEAR	TOT ADJ AREA	SUBAREA MARKET VALUE
BAS	2,251	100	2024	2,251	372,559
FCP	600	25	2024	150	24,826
FOP	306	30	2024	92	15,226
FOP	424	30	2024	127	21,019
FST	32	55	2024	18	2,979
FUS	322	100	2024	322	53,293
PTO	36	5	2024	2	331
STR	56	10	2024	6	993
TOTALS	4,027			2,968	491,229

MARKET ADJUSTMENTS

TYPE	MDL	EFF. AREA	TOT ADJ PTS	EFF. BASE RATE	REPL. COST NEW	AYB	EYB	ECON	FNCT		NORM	% COND
0500	01	2,968	105.2800	166.34	493,697	2023	2023	0	0	0	0.50	99.50

1 SFR CUST – 100% - 2024 Heated Area: 2573 HX Base Yr 2024

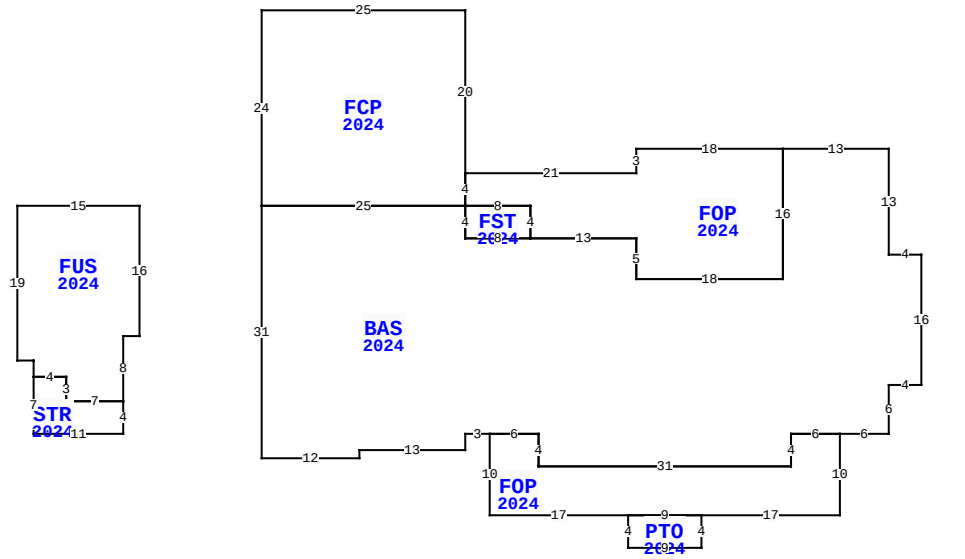

BLD DATE		LGL DATE	
XF DATE		LAND DATE	05/09/2025 MLU
INC DATE		AG DATE	

573200 LESSIE RD, HILLIARD

NASSAU COUNTY PROPERTY — VALUATION SUMMARY

VALUATION BY		STANDARD
Tax Group: 4	Tax Dist:	
BUILDING MARKET VALUE		491,229
TOTAL MARKET OB/XF VALUE		3,500
TOTAL LAND VALUE - MARKET		90,000
TOTAL MARKET VALUE		584,729
SOH/AGL Deduction		43,262
ASSESSED VALUE		541,467
TOTAL EXEMPTION VALUE	HX HB	50,722
BASE TAXABLE VALUE		490,745
TOTAL JUST VALUE		584,729
NCON VALUE		0
INCOME VALUE		
PREVIOUS YEAR MKT VALUE		526,207

PERMIT NUM	DESCRIPTION	AMT	ISSUED
B2302103	NEW CONSTR	466,949	02/16/2023
230000101		466,949	

SALES DATA

OFF RECORD Number	DATE	TYPE INST	Q / U	V / I	RSN CD	SALE PRICE
2586/1233	8/11/2022	WD	U	V	11	100
GRANTOR: CORBIN JANICE V & CAT						
GRANTEE: HUGGINS BRYCE SCOTT						
2192/1123	4/05/2018	QC	U	V	11	100
GRANTOR: HUGGINS LAURIE ANNE						
GRANTEE: HUGGINS BRYCE S						

BUILDING NOTES

BUILDING DIMENSIONS

BAS=[YR=2024;ORIG=10,10] E25 S4 E8 E13 S5 E18 N16 E13 S13 E4 S16 W4 S6 W6 W6 S4 W31 N4 W6 W3 S2 W13 S1 W12 N31 $
FST=[YR=2024;ORIG=35,10] E8 S4 W8 N4 $
FCP=[YR=2024;ORIG=10,10] E25 N4 N20 W25 S24 $
FOP=[YR=2024;ORIG=56,3] E18 S16 W18 N5 W13 N4 W8 N4 E21 N3 $
FOP=[YR=2024;ORIG=81,48] N10 W6 S4 W31 N4 W6 S10 E17 E9 E17 $
PTO=[YR=2024;ORIG=55,48] E9 S4 W9 N4 $
FUS=[YR=2024;ORIG=-20,10] E15 S16 W2 S8 W7 N3 W4 N2 W2 N19 $
STR=[YR=2024;ORIG=-7,38] N4 W7 N3 W4 S7 E11 $
.

EXTRA FEATURES

LN	OB/XF CODE	DESCRIPTION	BLD	CAP	L	W	UNITS	UT	Adj R	ADJ UNIT PRICE	ORIG COND	YEAR ON	YEAR ACTUAL	Q	% COND	OB/XF MKT VALUE	NOTES
1	0500	FP-PRE FAB	0	100	0	0	1.00	UT	3,500.00	3,500.00	100	2024	2023		100	3,500	

LAND DESCRIPTION

TOTAL OB/XF 3,500

LN	USE CODE	CLS	LAND USE DESCRIPTION	CAP	RD	LOC ZONE	FRONT	DEPTH	TOT LND UTS	UNIT TYPE	DT	DPTH FACT	% COND	TOT ADJ	UNIT PRICE	ADJ UNIT PRICE	LAND VALUE	OTHER ADJUSTMENTS AND NOTES	YEAR	DENSITY	DECL	FRZ	YR	CONSRV
1	000100	C	RES	100		OR	0.00	0.00	3.00	AC		1.00	1.00	1.00	30,000.00	30,000.00	90,000							

REVIEW DATE 12/28/2023 BY KW Total Acres: 3.00 Total Land Value: 90,000 Market: 0 Agricultural: 0 Common: 90,000 PRINTED 07/30/2025 BY SYS