PT OF NW 1/4 CASE# 05-DR-321
PARCELS 1 1-21 & 1-23
IN OR 2596/1414

HADDON ERIN BROOKE/MANNING WILLIAM ALTON ET AL
1886 MCGUIRE WAY
HILLIARD, FL 32046

2025

26-4N-23-0000-0001-0000

NASSAU COUNTY PROPERTY

BUILDING CHARACTERISTICS

ELEMENT	CD	CONSTRUCTION
Exterior Wall	05	AVERAGE 100
Roof Structur	03	GABLE/HIP 100
Roof Cover	03	COMP SHNGL 100
Interior Wall	05	DRYWALL 100
Interior Floo	14	CARPET 100
Air Condition	03	CENTRAL 100
Heating Type	04	AIR DUCTED 100
Bedrooms		3 100
Bathrooms		2 100
Frame	02	WOOD FRAME 100
Stories	1.	1. 100
Units		0 100
Occupancy	00	NONE 100
Quality	03	Quality Level 03

DOR CODE 0100 SINGLE FAMILY
MAP NUM
MKT AREA 09
NEIGHBORHOOD/LOC 9001.00

AREA TYPE	TOTAL GROSS AREA	PCT OF BASE	YEAR	TOT ADJ AREA	SUBAREA MARKET VALUE
BAS	1,184	100	1993	1,184	110,725
FOP	376	30	1993	113	10,567
UCP	1,758	20	1993	352	32,918
UOP	84	20	1993	17	1,590
UOP	114	20	1993	23	2,151
TOTALS	3,516			1,689	157,951

MARKET ADJUSTMENTS

TYPE	MDL	EFF. AREA	TOT ADJ PTS	EFF. BASE RATE	REPL. COST NEW	AYB	EYB	ECON	FNCT		NORM	% COND
0100	01	1,689	111.0000	111.00	187,479	1990	1990	0	0	0	15.75	84.25

1 SINGLE FAM – 100% - 2024 Heated Area: 1184 HX Base Yr 2024

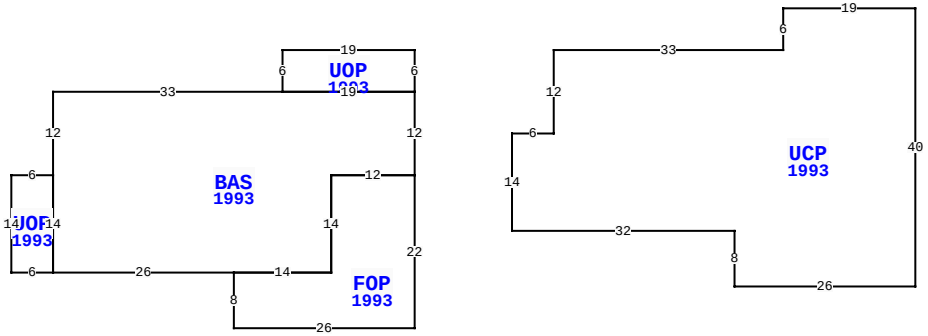

1886 MCGUIRE WAY, HILLIARD

BLD DATE		LGL DATE	
XF DATE		LAND DATE	05/09/2025 MLU
INC DATE		AG DATE	

VALUATION SUMMARY

VALUATION BY		STANDARD
Tax Group: 4	Tax Dist:	
BUILDING MARKET VALUE		157,951
TOTAL MARKET OB/XF VALUE		6,000
TOTAL LAND VALUE - MARKET		102,375
TOTAL MARKET VALUE		266,326
SOH/AGL Deduction		2,646
ASSESSED VALUE		263,680
TOTAL EXEMPTION VALUE	HX HB	50,722
BASE TAXABLE VALUE		212,958
TOTAL JUST VALUE		266,326
NCON VALUE		0
INCOME VALUE		
PREVIOUS YEAR MKT VALUE		256,249

PERMIT NUM	DESCRIPTION	AMT	ISSUED
MH9926	MH MOVE-ON	0	01/04/1999
6705	NEW CONSTR	44,727	09/04/1990

SALES DATA

OFF RECORD Number	DATE	TYPE INST	Q / U	V / I	RSN CD	SALE PRICE
2596/1414	10/14/2022	WD	U	I	37	130,000
GRANTOR: MCGUIRE DENNIS J						
GRANTEE: MANNING WILLIAM & E						
0869/1555	2/26/1999	WD	Q	I		97,000
GRANTOR: LAUGHRIDGE JERRY R						
GRANTEE: MCGUIRE DENNIS J &						

BUILDING NOTES

BUILDING DIMENSIONS

UOP=[YR=1993] W19 S6 BAS=[YR=1993] W33 S12 UOP=[YR=1993] W6 S14 E6 N14$ S14 E26 FOP=[YR=1993] S8 E26 N22 W12 S14 W14 $ E14 N14 E12 N12 W19$ E19 N6$ PTR=E20 UCP=[YR=1993] E33 N6 E19 S40 W26 N8 W32 N14 E6 N12$ W20$.

EXTRA FEATURES

LN	OB/XF CODE	DESCRIPTION	BLD	CAP	L	W	UNITS	UT	Adj R	ADJ UNIT PRICE	ORIG COND	YEAR ON	YEAR ACTUAL	Q	% COND	OB/XF MKT VALUE	NOTES
1	0936	SEPTC TANK	0	100	0	0	1.00	UT	6,000.00	6,000.00	100	2000	2000	3	100	6,000	

LAND DESCRIPTION

TOTAL OB/XF 6,000

LN	USE CODE	CLS	LAND USE DESCRIPTION	CAP	RD	LOC ZONE	FRONT	DEPTH	TOT LND UTS	UNIT TYPE	DT	DPTH FACT	% COND	TOT ADJ	UNIT PRICE	ADJ UNIT PRICE	LAND VALUE	OTHER ADJUSTMENTS AND NOTES	YEAR	DENSITY	DECL	FRZ	YR	CONSRV
1	000100	C	RES	100	0004	OR	0.00	0.00	5.25	AC		1.00	1.00	1.00	19,500.00	19,500.00	102,375							

REVIEW DATE 07/01/2020 BY TW Total Acres: 5.25 Total Land Value: 102,375 Market: 0 Agricultural: 0 Common: 102,375 PRINTED 07/30/2025 BY SYS