LOT 14
DECL COV & RESTR OR 1458/887
PRIVATE QUARTERS PB 7/175

SMITH WAYNE A & SHERRY L
94030 HEMLOCK CT
FERNANDINA BEACH, FL 32034

2025

26-2N-28-168P-0014-0000

BUILDING CHARACTERISTICS

ELEMENT	CD	CONSTRUCTION
Exterior Wall	16	WD FR STUC 100
Roof Structur	08	IRREGULAR 100
Roof Cover	03	COMP SHNGL 100
Interior Wall	05	DRYWALL 100
Interior Floo	13	LVT/LAMNT 100
Interior Kitch	09	NEW N/A 0
Air Condition	03	CENTRAL 100
Heating Type	04	AIR DUCTED 100
Bedrooms		3 100
Bathrooms		2.5 100
Frame	02	WOOD FRAME 100
Stories	2.	2. 100
Units		0 100
Quality	05	Quality Level 05
DOR CODE	0100	SINGLE FAMILY
MAP NUM		MKT AREA 04
NEIGHBORHOOD/LOC	4042.00	

AREA TYPE	TOTAL GROSS AREA	PCT OF BASE	YEAR	TOT ADJ AREA	SUBAREA MARKET VALUE
BAS	1,572	100	2024	1,572	179,516
FGR	150	55	2024	82	9,364
FGR	478	55	2024	263	30,034
FOP	36	30	2024	11	1,256
FOP	63	30	2024	19	2,170
FSP	60	40	2024	24	2,740
FSP	133	40	2024	53	6,053
FUS	963	100	2024	963	109,971
TOTALS	3,455			2,987	341,104

MARKET ADJUSTMENTS

TYPE	MDL	EFF. AREA	TOT ADJ PTS	EFF. BASE RATE	REPL. COST NEW	AYB	EYB	ECON	FNCT		NORM	% COND
0320	01	2,987	114.7740	114.77	342,818	2023	2023	0	0	0	0.50	99.50

1 TOWNHOUSE - 100% - 2025 Heated Area: 2535 HX Base Yr 2025

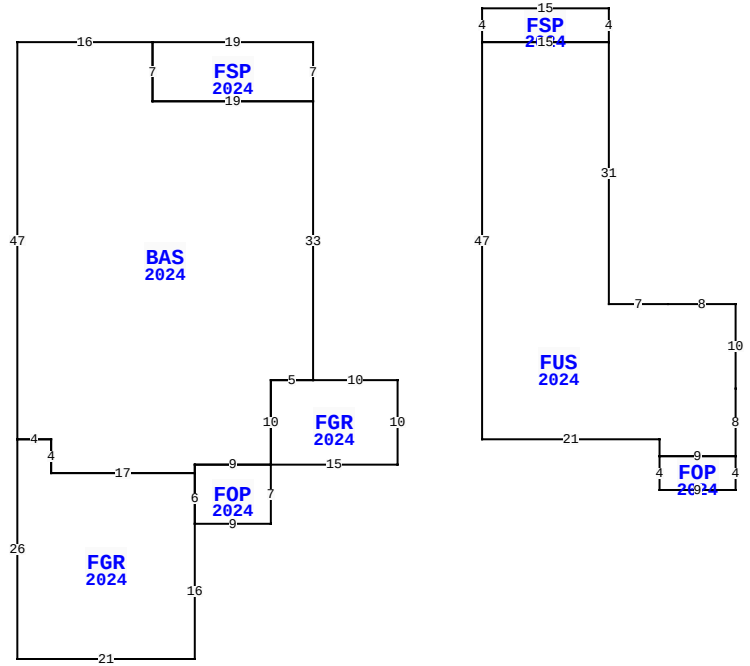

94030 HEMLOCK CT, FERNANDINA BEACH

BLD DATE		LGL DATE	
XF DATE		LAND DATE	05/08/2025 MLU
INC DATE		AG DATE	

NASSAU COUNTY PROPERTY

PAGE 1 of 1 4

VALUATION SUMMARY

VALUATION BY		STANDARD
Tax Group: 4	Tax Dist:	
BUILDING MARKET VALUE		341,104
TOTAL MARKET OB/XF VALUE		13,778
TOTAL LAND VALUE - MARKET		120,000
TOTAL MARKET VALUE		474,882
SOH/AGL Deduction		0
ASSESSED VALUE		474,882
TOTAL EXEMPTION VALUE	HX HB	50,722
BASE TAXABLE VALUE		424,160
TOTAL JUST VALUE		474,882
NCON VALUE		0
INCOME VALUE		
PREVIOUS YEAR MKT VALUE		452,421

PERMIT NUM	DESCRIPTION	AMT	ISSUED
B250003024	SCRN ENCL	18,000	03/25/2025
			11/17/2023
2301063	NEW CONSTR	472,203	01/25/2023

SALES DATA

OFF RECORD Number	DATE	TYPE INST	Q U	V I	RSN CD	SALE PRICE
2707/101	4/16/2024	WD	Q	I	01	675,000
GRANTOR: SCARECROW ANSC OPERAT						
GRANTEE: SMITH WAYNE A & SHE						
2590/0232	9/08/2022	SW	U	V	30	750,300
GRANTOR: HEMLOCK LAND TRUST						
GRANTEE: SCARECROW ANSC OPER						

BUILDING NOTES

BUILDING DIMENSIONS

BAS=[YR=2024;ORIG=51,10] N7 W16 S47 E4 S4 E17 N1 E9 N10 E5 N33 W19 $
FUS=[YR=2024;ORIG=90,3] E15 S31 E7 E8 S10 S8 W9 N2 W21 N47 $
FGR=[YR=2024;ORIG=35,50] E4 S4 E17 S6 S16 W21 N26 $
FGR=[YR=2024;ORIG=65,43] E5 E10 S10 W15 N10 $
FSP=[YR=2024;ORIG=70,3] W19 S7 E19 N7 $
FOP=[YR=2024;ORIG=56,53] E9 S7 W9 N6 N1 $
FSP=[YR=2024;ORIG=90,-1] E15 S4 W15 N4 $
FOP=[YR=2024;ORIG=111,52] E9 S4 W9 N4 $
.

EXTRA FEATURES

LN	OB/XF CODE	DESCRIPTION	BLD	CAP	L	W	UNITS	UT	Adj R	ADJ UNIT PRICE	ORIG COND	YEAR ON	YEAR ACTUAL	Q	% COND	OB/XF MKT VALUE	NOTES
1	0855	CONC PAVER	0	100	0	0	568.00	SF	10.00	10.00	100	2024	2023		100	5,680	
2	0855	CONC PAVER	0	100	0	0	500.00	SF	10.00	10.00	100	2024	2023		100	5,000	
3	0855	CONC PAVER	0	100	0	0	81.00	SF	10.00	10.00	100	2024	2023		100	810	
4	0855	CONC PAVER	0	100	0	0	170.00	SF	10.00	10.00	100	2024	2023		100	1,700	
5	1076	TRELLIS A	0	100	10	8	80.00	SF	7.50	7.50	100	2024	2023		98	588	

LAND DESCRIPTION

TOTAL OB/XF 13,778

LN	USE CODE	CLS	LAND USE DESCRIPTION	CAP	RD	LOC ZONE	FRONT	DEPTH	TOT LND UTS	UNIT TYPE	DT	DPTH FACT	% COND	TOT ADJ	UNIT PRICE	ADJ UNIT PRICE	LAND VALUE	OTHER ADJUSTMENTS AND NOTES	YEAR	DENSITY	DECL	FRZ	YR	CONSRV
1	000310	C	TOWNHOUSE	100		PUD	0.00	0.00	1.00	LT		1.00	1.00	1.00	120,000.00	120,000.00	120,000							

REVIEW DATE 07/28/2025 BY KW Total Acres: 0.00 Total Land Value: 120,000 Market: 0 Agricultural: 0 Common: 120,000 PRINTED 07/30/2025 BY SYS