LOT 289
IN OR 2221/1426
FLORA PARKE UNIT 6B PBK 8/283

PREBLE JEFFREY H & NANCY KAY
35101 MIMOSA PARKE PLACE
FERNANDINA BEACH, FL 32034

2025

26-2N-28-0556-0289-0000

BUILDING CHARACTERISTICS

ELEMENT	CD	CONSTRUCTION
Exterior Wall	16	WD FR STUC 100
Roof Structur	03	GABLE/HIP 100
Roof Cover	03	COMP SHNGL 100
Interior Wall	05	DRYWALL 100
Interior Floo	11	CLAY TILE 60
Interior Floo	14	CARPET 40
Air Condition	03	CENTRAL 100
Heating Type	04	AIR DUCTED 100
Bedrooms		4 100
Bathrooms		3.5 100
Frame	02	WOOD FRAME 100
Stories	1.5	1.5 100
Units		0 100
Occupancy	00	NONE 100
Quality	03	Quality Level 03
DOR CODE	0100	SINGLE FAMILY
MAP NUM		MKT AREA 04
NEIGHBORHOOD/LOC	4041.00	

AREA TYPE	TOTAL GROSS AREA	PCT OF BASE	YEAR	TOT ADJ AREA	SUBAREA MARKET VALUE
BAS	2,610	100	2018	2,610	359,096
FGR	527	55	2018	290	39,900
FOP	38	30	2018	11	1,513
FSP	210	40	2021	84	11,558
FST	15	55	2018	8	1,101
FUS	443	100	2018	443	60,950
STR	77	10	2018	8	1,101
TOTALS	3,920			3,454	475,218

MARKET ADJUSTMENTS

TYPE	MDL	EFF. AREA	TOT ADJ PTS	EFF. BASE RATE	REPL. COST NEW	AYB	EYB	ECON	FNCT		NORM	% COND
0900	01	3,454	107.4560	141.84	489,915	2018	2018	0	0	0	3.00	97.00

1 SNGL FAM – 100% - 2019 Heated Area: 3053 HX Base Yr 2019

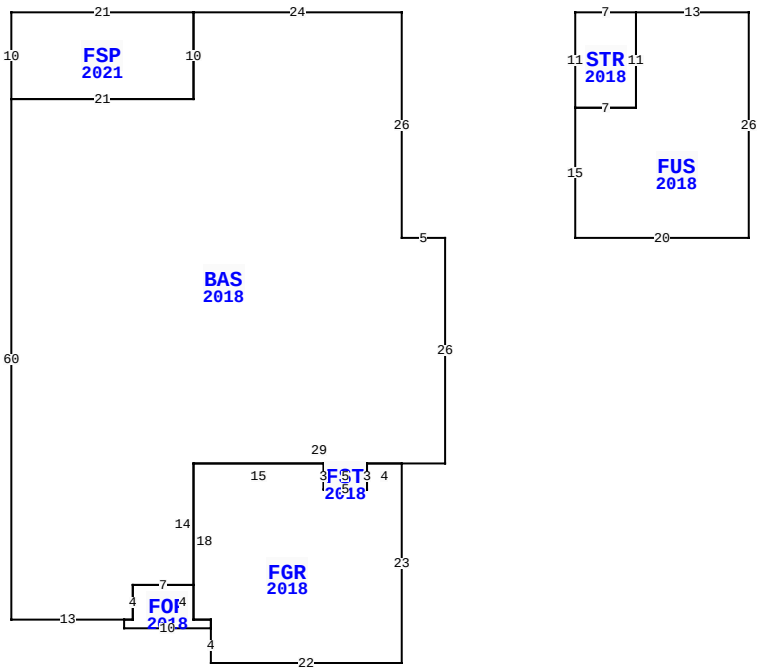

35101 MIMOSA PARKE PL, FERNANDINA BEACH

BLD DATE		LGL DATE	
XF DATE		LAND DATE	04/23/2025 MLU
INC DATE		AG DATE	

NASSAU COUNTY PROPERTY

PAGE 1 of 1 4

VALUATION SUMMARY

VALUATION BY		STANDARD
Tax Group: 4	Tax Dist:	
BUILDING MARKET VALUE		475,218
TOTAL MARKET OB/XF VALUE		65,210
TOTAL LAND VALUE - MARKET		85,000
TOTAL MARKET VALUE		625,428
SOH/AGL Deduction		247,697
ASSESSED VALUE		377,731
TOTAL EXEMPTION VALUE	HX HB	50,722
BASE TAXABLE VALUE		327,009
TOTAL JUST VALUE		625,428
NCON VALUE		0
INCOME VALUE		
PREVIOUS YEAR MKT VALUE		594,094

PERMIT NUM	DESCRIPTION	AMT	ISSUED
B2105895	SCRN ENCLSR	12,425	05/10/2021
B2013328	SWIM POOL	66,410	01/07/2021
C1803171	CO ISSUED	0	08/24/2018
B1803171	NEW CONSTR	393,289	03/28/2018

SALES DATA

OFF RECORD Number	DATE	TYPE INST	Q / U	V / I	RSN CD	SALE PRICE
2221/1426	8/31/2018	WD	Q	I	02	379,700
GRANTOR: SEDA CONSTRUCTION COM						
GRANTEE: PREBLE JEFFREY H &						
2191/1232	4/11/2018	WD	U	V	30	60,000
GRANTOR: FLORA PARKE DEVELOPME						
GRANTEE: SEDA CONSTRUCTION C						

BUILDING NOTES

BUILDING DIMENSIONS

BAS=[YR=2018] W24 FSP=[YR=2021] W21 S10 E21 N10$ S10 W21 S60 E13 FOP=[YR=2018] S1 E10FGR=[YR=2018] S4 E22 N23 W4 FST=[YR=2018] W5 S3 E5 N3$ S3 W5 N3 W15 S18 E2 S1$ N1 W2 N4 W7 S4 W1$ E1 N4 E7 N14 E29 N26 W5 N26$ PTR=E20 STR=[YR=2018] E7 FUS=[YR=2018] E13 S26 W20 N15 E7 N11 $ S11 W7 N11$ W20 $.

EXTRA FEATURES

LN	OB/XF CODE	DESCRIPTION	BLD	CAP	L	W	UNITS	UT	Adj R	ADJ UNIT PRICE	ORIG COND	YEAR ON	YEAR ACTUAL	Q	% COND	OB/XF MKT VALUE	NOTES
1	0811	CONCRETE B	0	100	0	0	541.00	SF	5.20	5.20	100	2018	2018	3	97	2,729	
2	0462	ST/AL FNC	0	100	0	0	1,128.00	SF	10.00	10.00	100	2018	2018	3	84	9,475	
3	0911	SCRN RM A	0	100	45	21	945.00	SF	17.50	17.50	100	2021	2021	3	90	14,884	
4	0861	POOL GUNIT	0	100	32	13	416.00	SF	85.00	85.00	100	2021	2021	3	93	32,885	
5	0855	CONC PAVER	0	100	0	0	529.00	SF	10.00	10.00	100	2021	2021	3	99	5,237	

LAND DESCRIPTION

TOTAL OB/XF 65,210

LN	USE CODE	CLS	LAND USE DESCRIPTION	CAP	RD	LOC ZONE	FRONT	DEPTH	TOT LND UTS	UNIT TYPE	DT	DPTH FACT	% COND	TOT ADJ	UNIT PRICE	ADJ UNIT PRICE	LAND VALUE	OTHER ADJUSTMENTS AND NOTES	YEAR	DENSITY	DECL	FRZ	YR	CONSRV
1	000100	C	RES	100		PUD	0.00	0.00	1.00	LT		1.00	1.00	1.00	85,000.00	85,000.00	85,000							

REVIEW DATE 01/05/2022 BY KW Total Acres: 0.00 Total Land Value: 85,000 Market: 0 Agricultural: 0 Common: 85,000 PRINTED 07/30/2025 BY SYS