LOT 209
FLORA PARKE UNIT 6B PBK 8/283

STITES MICHAEL J SR & JENNIFER H
32344 FERN PARKE WAY
FERNANDINA BEACH, FL 32034

2025

26-2N-28-0556-0209-0000

BUILDING CHARACTERISTICS

ELEMENT	CD	CONSTRUCTION
Exterior Wall	16	WD FR STUC 100
Roof Structur	03	GABLE/HIP 100
Roof Cover	03	COMP SHNGL 100
Interior Wall	05	DRYWALL 100
Interior Floo	11	CLAY TILE 60
Interior Floo	14	CARPET 40
Air Condition	03	CENTRAL 100
Heating Type	04	AIR DUCTED 100
Bedrooms		3 100
Bathrooms		2 100
Frame	02	WOOD FRAME 100
Stories	1.	1. 100
Units		0 100
Occupancy	00	NONE 100
Quality	03	Quality Level 03
DOR CODE	0100	SINGLE FAMILY
MAP NUM		MKT AREA 04
NEIGHBORHOOD/LOC	4041.00	

AREA TYPE	TOTAL GROSS AREA	PCT OF BASE	YEAR	TOT ADJ AREA	SUBAREA MARKET VALUE
BAS	2,148	100	2018	2,148	303,096
FGR	754	55	2018	415	58,559
FOP	50	30	2018	15	2,117
FSP	266	40	2018	106	14,957
TOTALS	3,218			2,684	378,728

MARKET ADJUSTMENTS

TYPE	MDL	EFF. AREA	TOT ADJ PTS	EFF. BASE RATE	REPL. COST NEW	AYB	EYB	ECON	FNCT		NORM	% COND
0900	01	2,684	110.2080	145.47	390,441	2018	2018	0	0	0	3.00	97.00

1 SNGL FAM – 100% - 2021 Heated Area: 2148 HX Base Yr 2021

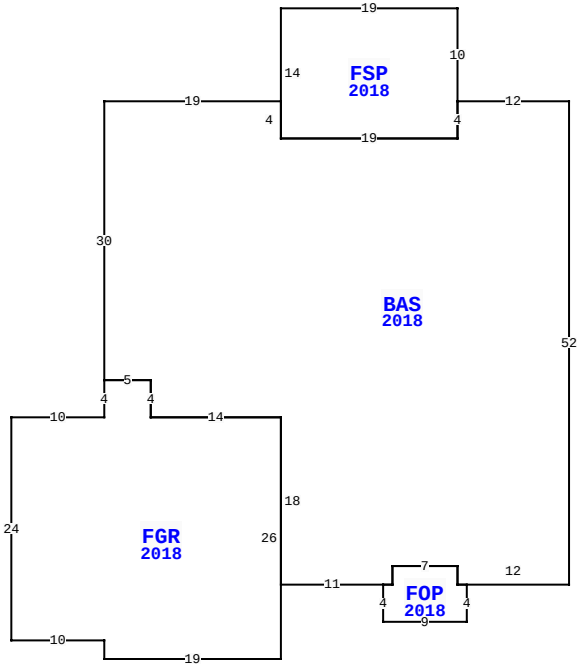

32344 FERN PARKE WAY, FERNANDINA BEACH

BLD DATE		LGL DATE	
XF DATE		LAND DATE	04/23/2025 MLU
INC DATE		AG DATE	

NASSAU COUNTY PROPERTY

PAGE 1 of 1 4

VALUATION SUMMARY

VALUATION BY		STANDARD
Tax Group: 4	Tax Dist:	
BUILDING MARKET VALUE		378,728
TOTAL MARKET OB/XF VALUE		13,892
TOTAL LAND VALUE - MARKET		85,000
TOTAL MARKET VALUE		477,620
SOH/AGL Deduction		197,825
ASSESSED VALUE		279,795
TOTAL EXEMPTION VALUE	HX HB	50,722
BASE TAXABLE VALUE		229,073
TOTAL JUST VALUE		477,620
NCON VALUE		0
INCOME VALUE		
PREVIOUS YEAR MKT VALUE		449,598

PERMIT NUM	DESCRIPTION	AMT	ISSUED
C1802272	CO ISSUED	0	07/26/2018
B1802272	NEW CONSTR	290,822	03/05/2018

SALES DATA

OFF RECORD Number	DATE	TYPE INST	Q U	V I	RSN CD	SALE PRICE
2389/1835	9/04/2020	WD	Q	I	01	349,000
GRANTOR: NEE PATRICK J III & E						
GRANTEE: STITES MICHAEL J SR						
2215/0775	7/30/2018	WD	Q	I	01	307,300
GRANTOR: SEDA CONSTRUCTION COM						
GRANTEE: NEE PATRICK J III &						

BUILDING NOTES

BUILDING DIMENSIONS

BAS=[YR=2018] W12 FSP=[YR=2018] N10 W19 S14 E19 N4$ S4 W19 N4 W19 S30 FGR=[YR=2018] S4 W10 S24 E10 S2 E19 N26 W14 N4 W5$ E5 S4 E14 S18 E11 FOP=[YR=2018] S4 E9 N4 W1 N2 W7 S2 W1$ E1 N2 E7 S2 E12 N52$.

EXTRA FEATURES

LN	OB/XF CODE	DESCRIPTION	BLD	CAP	L	W	UNITS	UT	Adj R	ADJ UNIT PRICE	ORIG COND	YEAR ON	YEAR ACTUAL	Q	% COND	OB/XF MKT VALUE	NOTES
1	0811	CONCRETE B	0	100	0	0	909.00	SF	5.20	5.20	100	2018	2018	3	97	4,585	
2	0476	VF 6 SBPL	0	100	0	0	288.00	LF	32.00	32.00	100	2018	2018	3	92	8,479	
3	0470	VNYL GATE	0	100	0	0	3.00	UT	300.00	300.00	100	2018	2018	3	92	828	

LAND DESCRIPTION

TOTAL OB/XF 13,892

LN	USE CODE	CLS	LAND USE DESCRIPTION	CAP	RD	LOC ZONE	FRONT	DEPTH	TOT LND UTS	UNIT TYPE	DT	DPTH FACT	% COND	TOT ADJ	UNIT PRICE	ADJ UNIT PRICE	LAND VALUE	OTHER ADJUSTMENTS AND NOTES	YEAR	DENSITY	DECL	FRZ	YR	CONSRV
1	000100	C	RES	100		PUD	0.00	0.00	1.00	LT		1.00	1.00	1.00	85,000.00	85,000.00	85,000							

REVIEW DATE 05/31/2024 BY KBA Total Acres: 0.00 Total Land Value: 85,000 Market: 0 Agricultural: 0 Common: 85,000 PRINTED 07/30/2025 BY SYS