LOT 195
FLORA PARKE UNIT 6B PBK 8/283

SENTER LISA MICHELE REVOCABLE TRUST/SENTER BRUCE E
32059 PRIMROSE PARKE WAY
FERNANDINA BEACH, FL 32034

2025

26-2N-28-0556-0195-0000

BUILDING CHARACTERISTICS

ELEMENT	CD	CONSTRUCTION
Exterior Wall	16	WD FR STUC 100
Roof Structur	03	GABLE/HIP 100
Roof Cover	03	COMP SHNGL 100
Interior Wall	05	DRYWALL 100
Interior Floo	11	CLAY TILE 50
Interior Floo	14	CARPET 50
Air Condition	03	CENTRAL 100
Heating Type	04	AIR DUCTED 100
Bedrooms		4 100
Bathrooms		3.5 100
Frame	02	WOOD FRAME 100
Stories	1.5	1.5 100
Units		0 100
Occupancy	00	NONE 100
Quality	03	Quality Level 03
DOR CODE	0100	SINGLE FAMILY
MAP NUM		MKT AREA 04
NEIGHBORHOOD/LOC	4041.00	

AREA TYPE	TOTAL GROSS AREA	PCT OF BASE	YEAR	TOT ADJ AREA	SUBAREA MARKET VALUE
BAS	2,610	100	2019	2,610	356,927
FGR	527	55	2019	290	39,658
FOP	61	30	2019	18	2,462
FSP	210	40	2020	84	11,487
FST	15	55	2019	8	1,094
FUS	443	100	2019	443	60,582
STR	77	10	2019	8	1,094
TOTALS	3,943			3,461	473,304

MARKET ADJUSTMENTS

TYPE	MDL	EFF. AREA	TOT ADJ PTS	EFF. BASE RATE	REPL. COST NEW	AYB	EYB	ECON	FNCT		NORM	% COND
0900	01	3,461	106.2600	140.26	485,440	2019	2019	0	0	0	2.50	97.50

1 SNGL FAM – 100% - 2023 Heated Area: 3053 HX Base Yr 2023

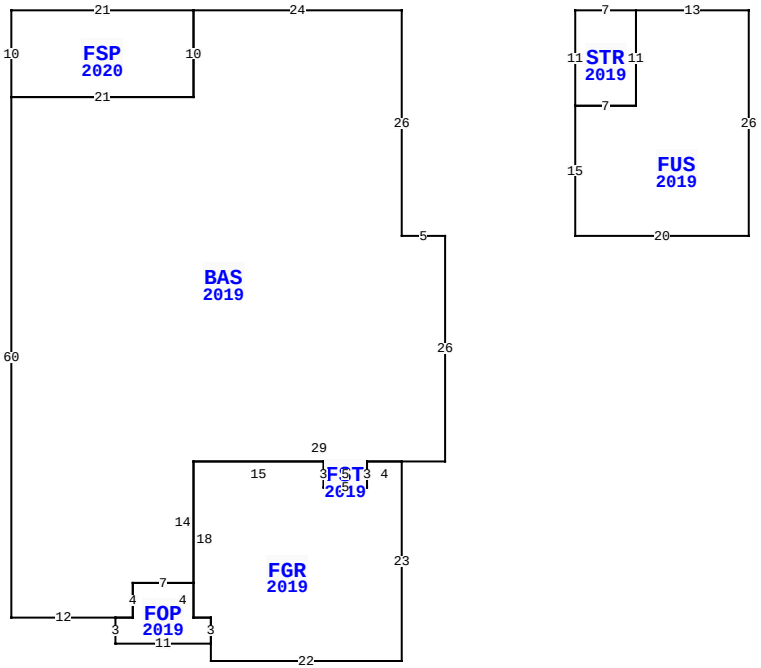

32059 PRIMROSE PARKE WAY, FERNANDINA BEACH

BLD DATE		LGL DATE	
XF DATE		LAND DATE	04/23/2025 MLU
INC DATE		AG DATE	

NASSAU COUNTY PROPERTY

PAGE 1 of 1 4

VALUATION SUMMARY

VALUATION BY		STANDARD
Tax Group: 4	Tax Dist:	
BUILDING MARKET VALUE		473,304
TOTAL MARKET OB/XF VALUE		40,933
TOTAL LAND VALUE - MARKET		85,000
TOTAL MARKET VALUE		599,237
SOH/AGL Deduction		28,652
ASSESSED VALUE		570,585
TOTAL EXEMPTION VALUE	HX HB	50,722
BASE TAXABLE VALUE		519,863
TOTAL JUST VALUE		599,237
NCON VALUE		0
INCOME VALUE		
PREVIOUS YEAR MKT VALUE		567,771

PERMIT NUM	DESCRIPTION	AMT	ISSUED
B200655	SCRN ENCLSR	17,388	10/01/2020
B203885	SWIM POOL	47,751	05/22/2020
C1812573	CO ISSUED	0	05/13/2019
B1812573	NEW CONSTR	400,894	12/31/2018

SALES DATA

OFF RECORD Number	DATE	TYPE INST	Q U	V I	RSN CD	SALE PRICE
2750/724	11/13/2024	WD	U	I	11	100
GRANTOR: SENTER LISA M & BRUCE						
GRANTEE: SENTER LISA MICHELE						
2526/1327	1/04/2022	WD	Q	I	02	535,000
GRANTOR: WEAVER STEPHANIE A &						
GRANTEE: SENTER MICHELE & BR						

BUILDING NOTES

BUILDING DIMENSIONS

BAS=[YR=2019] W24 FSP=[YR=2020] W21 S10 E21 N10$ S10 W21 S60 E12 FOP=[YR=2019] S3 E11 FGR=[YR=2019] S2 E22 N23 W4 FST=[YR=2019] W5 S3 E5 N3$ S3 W5 N3W15 S18 E2 S3$ N3 W2 N4 W7 S4 W2$ E2 N4 E7 N14 E29 N26 W5 N26$ PTR= E20 STR=[YR=2019] E7 FUS=[YR=2019] E13 S26 W20 N15 E7 N11$ S11 W7 N11$ W20$.

EXTRA FEATURES

LN	OB/XF CODE	DESCRIPTION	BLD	CAP	L	W	UNITS	UT	Adj R	ADJ UNIT PRICE	ORIG COND	YEAR ON	YEAR ACTUAL	Q	% COND	OB/XF MKT VALUE	NOTES
1	0810	CONCRETE A	0	100	12	3	36.00	SF	6.50	6.50	100	2019	2019	3	97	227	
2	0811	CONCRETE B	0	100	0	0	556.00	SF	5.20	5.20	100	2019	2019	3	97	2,804	
3	0911	SCRN RM A	0	100	45	16	720.00	SF	17.50	17.50	100	2020	2020	3	86	10,836	
4	0861	POOL GUNIT	0	100	30	10	300.00	SF	85.00	85.00	100	2020	2020	3	90	22,950	
5	0855	CONC PAVER	0	100	0	0	420.00	SF	10.00	10.00	100	2020	2020	3	98	4,116	

LAND DESCRIPTION

TOTAL OB/XF 40,933

LN	USE CODE	CLS	LAND USE DESCRIPTION	CAP	RD	LOC ZONE	FRONT	DEPTH	TOT LND UTS	UNIT TYPE	DT	DPTH FACT	% COND	TOT ADJ	UNIT PRICE	ADJ UNIT PRICE	LAND VALUE	OTHER ADJUSTMENTS AND NOTES	YEAR	DENSITY	DECL	FRZ	YR	CONSRV
1	000100	C	RES	100		PUD	0.00	0.00	1.00	LT		1.00	1.00	1.00	85,000.00	85,000.00	85,000							

REVIEW DATE 01/06/2021 BY KW Total Acres: 0.00 Total Land Value: 85,000 Market: 0 Agricultural: 0 Common: 85,000 PRINTED 07/30/2025 BY SYS