LOT 182
FLORA PARKE UNIT 6B PBK 8/283

MEULLEN NORMAN F JR/CHAPMAN LISA
32399 FERN PARKE WAY
FERNANDINA BEACH, FL 32034

2025

26-2N-28-0556-0182-0000

BUILDING CHARACTERISTICS

ELEMENT	CD	CONSTRUCTION
Exterior Wall	31	HARDIE BRD 100
Roof Structur	03	GABLE/HIP 100
Roof Cover	03	COMP SHNGL 100
Interior Wall	05	DRYWALL 100
Interior Floo	11	CLAY TILE 50
Interior Floo	14	CARPET 50
Air Condition	03	CENTRAL 100
Heating Type	04	AIR DUCTED 100
Bedrooms		4 100
Bathrooms		3 100
Frame	02	WOOD FRAME 100
Stories	1.5	1.5 100
Units		0 100
Occupancy	00	NONE 100
Quality	03	Quality Level 03
DOR CODE	0100	SINGLE FAMILY
MAP NUM		MKT AREA 04
NEIGHBORHOOD/LOC	4041.00	

AREA TYPE	TOTAL GROSS AREA	PCT OF BASE	YEAR	TOT ADJ AREA	SUBAREA MARKET VALUE
BAS	2,632	100	2021	2,632	351,350
FGR	765	55	2021	421	56,200
FOP	62	30	2021	19	2,536
FOP	210	30	2021	63	8,410
FUS	443	100	2021	443	59,137
STR	77	10	2021	8	1,068
TOTALS	4,189			3,586	478,701

MARKET ADJUSTMENTS

TYPE	MDL	EFF. AREA	TOT ADJ PTS	EFF. BASE RATE	REPL. COST NEW	AYB	EYB	ECON	FNCT		NORM	% COND
0900	01	3,586	102.1500	134.84	483,536	2021	2021	0	0	0	1.00	99.00

1 SNGL FAM – 100% - 2025 Heated Area: 3075 HX Base Yr 2025

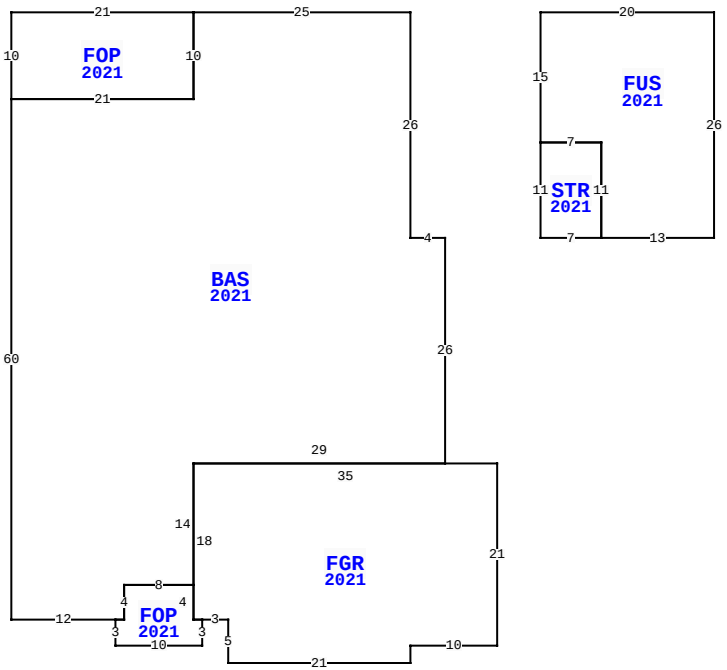

32399 FERN PARKE WAY, FERNANDINA BEACH

BLD DATE		LGL DATE	
XF DATE		LAND DATE	04/23/2025 MLU
INC DATE		AG DATE	

NASSAU COUNTY PROPERTY

PAGE 1 of 1 4

VALUATION SUMMARY

VALUATION BY		STANDARD
Tax Group: 4	Tax Dist:	
BUILDING MARKET VALUE		478,701
TOTAL MARKET OB/XF VALUE		9,664
TOTAL LAND VALUE - MARKET		85,000
TOTAL MARKET VALUE		573,365
SOH/AGL Deduction		0
ASSESSED VALUE		573,365
TOTAL EXEMPTION VALUE	HX HB	50,722
BASE TAXABLE VALUE		522,643
TOTAL JUST VALUE		573,365
NCON VALUE		0
INCOME VALUE		
PREVIOUS YEAR MKT VALUE		540,377

PERMIT NUM	DESCRIPTION	AMT	ISSUED
C209201	CO ISSUED	0	03/01/2021
B209201	NEW CONSTR	420,347	10/01/2020

SALES DATA

OFF RECORD Number	DATE	TYPE INST	Q / U	V / I	RSN CD	SALE PRICE
2728/1983	7/30/2024	WD	Q	I	02	614,000
GRANTOR: SOWELL GEORGE CURTIS						
GRANTEE: MEULLEN NORMAN F JR						
2439/1497	3/02/2021	WD	Q	I	01	404,100
GRANTOR: SEDA CONSTRUCTION COM						
GRANTEE: SOWELL GEORGE CURTI						

BUILDING NOTES

BUILDING DIMENSIONS

BAS=[YR=2021] W25 FOP=[YR=2021] W21 S10 E21 N10$ S10 W21 S60 E12 FOP=[YR=2021] S3 E10 N3 FGR=[YR=2021] E3 S5 E21 N2 E10 N21 W35 S18 E1$ W1 N4 W8 S4 W1$ E1 N4 E8 N14 E29 N26 W4 N26$ PTR= E15 FUS=[YR=2021] E20 S26 W13 STR=[YR=2021] W7 N11 E7 S11$ N11 W7 N15$ W15 $.

EXTRA FEATURES

LN	OB/XF CODE	DESCRIPTION	BLD	CAP	L	W	UNITS	UT	Adj R	ADJ UNIT PRICE	ORIG COND	YEAR ON	YEAR ACTUAL	Q	% COND	OB/XF MKT VALUE	NOTES
1	0810	CONCRETE A	0	100	14	3	42.00	SF	6.50	6.50	100	2021	2021	3	99	270	
2	0811	CONCRETE B	0	100	0	0	838.00	SF	5.20	5.20	100	2021	2021	3	99	4,314	
3	0476	VF 6 SBPL	0	100	0	0	156.00	LF	32.00	32.00	100	2021	2021	3	96	4,792	
4	0470	VNYL GATE	0	100	0	0	1.00	UT	300.00	300.00	100	2021	2021	3	96	288	

LAND DESCRIPTION

TOTAL OB/XF 9,664

LN	USE CODE	CLS	LAND USE DESCRIPTION	CAP	RD	LOC ZONE	FRONT	DEPTH	TOT LND UTS	UNIT TYPE	DT	DPTH FACT	% COND	TOT ADJ	UNIT PRICE	ADJ UNIT PRICE	LAND VALUE	OTHER ADJUSTMENTS AND NOTES	YEAR	DENSITY	DECL	FRZ	YR	CONSRV
1	000100	C	RES	100		PUD	0.00	0.00	1.00	LT		1.00	1.00	1.00	85,000.00	85,000.00	85,000							

REVIEW DATE 08/10/2021 BY KW Total Acres: 0.00 Total Land Value: 85,000 Market: 0 Agricultural: 0 Common: 85,000 PRINTED 07/30/2025 BY SYS