LOT 125
FLORA PARKE #5 PB 7/335

HOGGARD MARY E L/E/
32515 WILLOW PARKE CIRCLE
FERNANDINA BEACH, FL 32034

2025

26-2N-28-0553-0125-0000

BUILDING CHARACTERISTICS

ELEMENT	CD	CONSTRUCTION
Exterior Wall	31	HARDIE BRD 100
Roof Structur	03	GABLE/HIP 100
Roof Cover	03	COMP SHNGL 100
Interior Wall	05	DRYWALL 100
Interior Floo	11	CLAY TILE 50
Interior Floo	14	CARPET 50
Air Condition	03	CENTRAL 100
Heating Type	04	AIR DUCTED 100
Bedrooms		3 100
Bathrooms		2 100
Frame	02	WOOD FRAME 100
Stories	1.	1. 100
Units		0 100
Occupancy	00	NONE 100
Quality	03	Quality Level 03
DOR CODE	0100	SINGLE FAMILY
MAP NUM		MKT AREA 04
NEIGHBORHOOD/LOC	4041.00	

AREA TYPE	TOTAL GROSS AREA	PCT OF BASE	YEAR	TOT ADJ AREA	SUBAREA MARKET VALUE
BAS	2,207	100	2020	2,207	312,672
FGR	677	55	2020	372	52,702
FOP	44	30	2020	13	1,842
FSP	281	40	2020	112	15,867
FST	15	55	2020	8	1,134
TOTALS	3,224			2,712	384,216

MARKET ADJUSTMENTS

TYPE	MDL	EFF. AREA	TOT ADJ PTS	EFF. BASE RATE	REPL. COST NEW	AYB	EYB	ECON	FNCT		NORM	% COND
0900	01	2,712	108.9600	143.83	390,067	2020	2020	0	0	0	1.50	98.50

1 SNGL FAM – 100% - 2021 Heated Area: 2207 HX Base Yr 2021

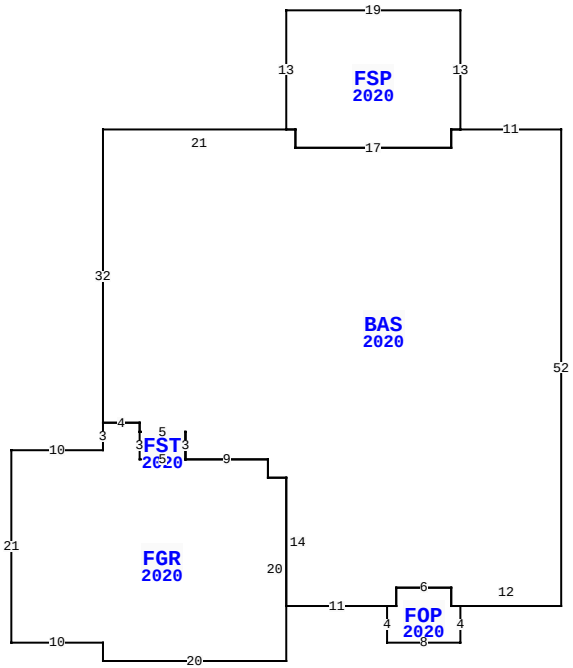

32515 WILLOW PARKE CIR, FERNANDINA BEACH

BLD DATE		LGL DATE	
XF DATE		LAND DATE	04/23/2025 MLU
INC DATE		AG DATE	

NASSAU COUNTY PROPERTY

PAGE 1 of 1 4

VALUATION SUMMARY

VALUATION BY		STANDARD
Tax Group: 4	Tax Dist:	
BUILDING MARKET VALUE		384,216
TOTAL MARKET OB/XF VALUE		9,457
TOTAL LAND VALUE - MARKET		85,000
TOTAL MARKET VALUE		478,673
SOH/AGL Deduction		152,134
ASSESSED VALUE		326,539
TOTAL EXEMPTION VALUE	HX HB	50,722
BASE TAXABLE VALUE		275,817
TOTAL JUST VALUE		478,673
NCON VALUE		0
INCOME VALUE		
PREVIOUS YEAR MKT VALUE		450,234

PERMIT NUM	DESCRIPTION	AMT	ISSUED
B2010776	SOLAR PANELS	26,190	11/05/2020
C2000780	CO ISSUED	0	06/22/2020
B2000780	NEW CONSTR	313,266	02/01/2020

SALES DATA

OFF RECORD Number	DATE	TYPE INST	Q U /	V I /	RSN CD	SALE PRICE
2515/1434	11/02/2021	TD	U	I	11	100
GRANTOR: HOGGARD MARY E						
GRANTEE: HOGGARD MARY E TRUS						
2371/1699	6/26/2020	WD	Q	I	01	378,000
GRANTOR: SEDA CONSTRUCTION COM						
GRANTEE: HOGGARD MARY E						

BUILDING NOTES

BUILDING DIMENSIONS

BAS=[YR=2020] W11 FSP=[YR=2020] N13 W19 S13 E1 S2 E17 N2 E1$ W1 S2 W17 N2 W21 S32 FGR=[YR=2020] S3 W10 S21 E10 S2 E20 N20 W2 N2 W9 FST=[YR=2020] W5 N3 E5 S3$ N3 W5 N1 W4$ E4 S1 E5 S3 E9 S2E2 S14 E11 FOP=[YR=2020] S4 E8 N4 W1 N2 W6 S2 W1$ E1 N2 E6 S2 E12 N52$.

EXTRA FEATURES

LN	OB/XF CODE	DESCRIPTION	BLD	CAP	L	W	UNITS	UT	Adj R	ADJ UNIT PRICE	ORIG COND	YEAR ON	YEAR ACTUAL	Q	% COND	OB/XF MKT VALUE	NOTES
1	0855	CONC PAVER	0	100	20	3	60.00	SF	10.00	10.00	100	2020	2020	3	98	588	
2	0855	CONC PAVER	0	100	0	0	905.00	SF	10.00	10.00	100	2020	2020	3	98	8,869	

LAND DESCRIPTION

TOTAL OB/XF 9,457

LN	USE CODE	CLS	LAND USE DESCRIPTION	CAP	RD	LOC ZONE	FRONT	DEPTH	TOT LND UTS	UNIT TYPE	DT	DPTH FACT	% COND	TOT ADJ	UNIT PRICE	ADJ UNIT PRICE	LAND VALUE	OTHER ADJUSTMENTS AND NOTES	YEAR	DENSITY	DECL	FRZ	YR	CONSRV
1	000134	C	RES POND	100		PUD	0.00	0.00	1.00	LT		1.00	1.00	1.00	85,000.00	85,000.00	85,000							

REVIEW DATE 02/11/2021 BY KW Total Acres: 0.00 Total Land Value: 85,000 Market: 0 Agricultural: 0 Common: 85,000 PRINTED 07/30/2025 BY SYS