LOT 293
PT OR 2085/1915
AMELIA NATIONAL #1B PB 7/191

RENFROE AUBREY V & ANITA L
95044 WILD CHERRY DR
FERNANDINA BEACH, FL 32034

2025

26-2N-28-006A-0293-0000

BUILDING CHARACTERISTICS

ELEMENT	CD	CONSTRUCTION
Exterior Wall	16	WD FR STUC 100
Roof Structur	08	IRREGULAR 100
Roof Cover	03	COMP SHNGL 100
Interior Wall	05	DRYWALL 100
Interior Floo	12	HARDWOOD 70
Interior Floo	14	CARPET 30
Air Condition	03	CENTRAL 100
Heating Type	04	AIR DUCTED 100
Bedrooms		4 100
Bathrooms		4 100
Frame	02	WOOD FRAME 100
Stories	1.5	1.5 100
Units		0 100
Occupancy	00	NONE 100
Quality	03	Quality Level 03
DOR CODE	0100	SINGLE FAMILY
MAP NUM		MKT AREA 04
NEIGHBORHOOD/LOC	4042.00	

AREA TYPE	TOTAL GROSS AREA	PCT OF BASE	YEAR	TOT ADJ AREA	SUBAREA MARKET VALUE
BAS	3,107	100	2016	3,107	597,797
FGR	850	55	2016	468	90,045
FOP	40	30	2016	12	2,309
FOP	681	30	2016	204	39,251
FSP	236	40	2016	94	18,085
FUS	568	100	2016	568	109,285
STR	48	10	2016	5	962
TOTALS	5,530			4,458	857,733

MARKET ADJUSTMENTS

TYPE	MDL	EFF. AREA	TOT ADJ PTS	EFF. BASE RATE	REPL. COST NEW	AYB	EYB	ECON	FNCT		NORM	% COND
0500	11	4,458	126.8476	200.42	893,472	2016	2016	0	0	0	4.00	96.00

1 SFR CUST – 100% - 2017 Heated Area: 3675 HX Base Yr 2017

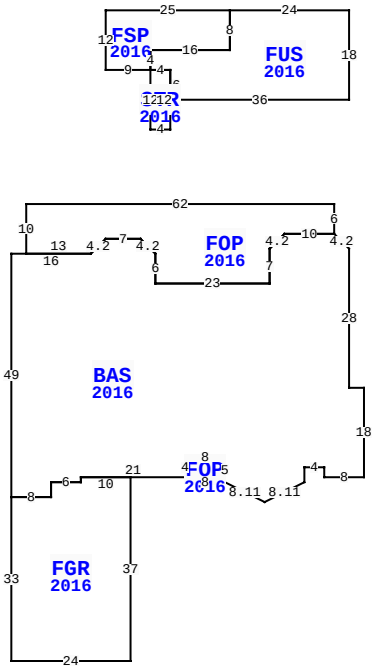

95044 WILD CHERRY DR, FERNANDINA BEACH

BLD DATE		LGL DATE	
XF DATE		LAND DATE	05/08/2025 MLU
INC DATE		AG DATE	

NASSAU COUNTY PROPERTY

PAGE 1 of 1 4

VALUATION SUMMARY

VALUATION BY		STANDARD
Tax Group: 4	Tax Dist:	
BUILDING MARKET VALUE		857,733
TOTAL MARKET OB/XF VALUE		34,215
TOTAL LAND VALUE - MARKET		200,000
TOTAL MARKET VALUE		1,091,948
SOH/AGL Deduction		586,095
ASSESSED VALUE		505,853
TOTAL EXEMPTION VALUE	HX HB	50,722
BASE TAXABLE VALUE		455,131
TOTAL JUST VALUE		1,091,948
NCON VALUE		0
INCOME VALUE		
PREVIOUS YEAR MKT VALUE		1,018,075

PERMIT NUM	DESCRIPTION	AMT	ISSUED
B1531143	CO ISSUED	0	05/04/2016
B1531143	NEW CONSTR	479,472	09/01/2015

SALES DATA

OFF RECORD Number	DATE	TYPE INST	Q / U	V / I	RSN CD	SALE PRICE
2085/1915	8/29/2016	WD	U	V	11	100
GRANTOR: FF FLORIDA SOUTHERN H						
GRANTEE: FF FLORIDA RESIDENT						
2053/1402	6/16/2016	WD	Q	I	01	542,700
GRANTOR: FF FLORIDA RESIDENTIA						
GRANTEE: RENFROE AUBREY V &						

BUILDING NOTES

EXTRA FEATURES

L N	OB/XF CODE	DESCRIPTION	BLD	CAP	L	W	UNITS	UT	Adj R	ADJ UNIT PRICE	ORIG COND	YEAR ON	YEAR ACTUAL	Q	% COND	OB/XF MKT VALUE	NOTES
1	0500	FP-PRE FAB	0	100	0	0	1.00	UT	3,500.00	3,500.00	100	2016	2016	3	97	3,395	
2	1126	CB/STC 8"	0	100	11	0	44.00	SF	8.00	8.00	100	2016	2016	3	95	334	
3	0855	CONC PAVER	0	100	0	0	1,085.00	SF	10.00	10.00	100	2016	2016	3	95	10,308	
4	0855	CONC PAVER	0	100	0	0	2,124.00	SF	10.00	10.00	100	2016	2016	3	95	20,178	

BUILDING DIMENSIONS

BAS=[YR=2016] L3 U3 FOP=[YR=2016] N6 W62 S10 E13 R3 U3 E7 D3 R3 S6 E23 N7 R3 U3 E10$ W10 L3 D3 S7 W23 N6 L3 U3 W7 L3 D3 W16 S49 FGR=[YR=2016] S33 E24 N37 W10 S1 W6 S3 W8$ E8 N3 E6 N1 E21 FOP=[YR=2016] S1 E8 N5 W8 S4 $ N4 E8 S5 D4 R8 R8 U4 N3 E4 S2 E8 N18 W3 N28$ PTR= N30 FUS=[YR=2016] N18 W24 FSP=[YR=2016] W25 S12 E9 N4 E16 N8$ S8 W16 S4 STR=[YR=2016] S12 E4 N12 W4$ E4 S6 E36$ S30$.

LAND DESCRIPTION

TOTAL OB/XF 34,215

L N	USE CODE	CLS	LAND USE DESCRIPTION	CAP	R D	LOC ZONE	FRONT	DEPTH	TOT LND UTS	UNIT TYPE	D T	DPTH FACT	% COND	TOT ADJ	UNIT PRICE	ADJ UNIT PRICE	LAND VALUE	OTHER ADJUSTMENTS AND NOTES	YEAR	DENSITY	DECL	FRZ	YR	CONSRV
1	000134	C	RES POND	100		PUD	0.00	0.00	1.00	LT		1.00	1.00	1.00	200,000.00	200,000.00	200,000							

REVIEW DATE 11/30/2022 BY DJA Total Acres: 0.00 Total Land Value: 200,000 Market: 0 Agricultural: 0 Common: 200,000 PRINTED 07/30/2025 BY SYS